2019 SCHOOL OF ENGINEERING

SENIOR DESIGN CLINIC

School of Engineering

UNIVERSITY OF St.Thomas

2019 SCHOOL OF ENGINEERING
SENIOR DESIGN CLINIC

Welcome to the University of St. Thomas School of Engineering 2019 Senior Design Clinic. What you see here today are projects that were nothing more than ideas several months ago. From dreams to reality, from an industry problem to a working solution, these projects are the culmination of two semesters of hard work by St. Thomas School of Engineering seniors.

Each year, more than thirty companies and non-profit organizations engage our students with real-world engineering challenges. They ask, 'Is this possible?' and let the teams go to work.

The teams will say, 'At times the going gets tough'. This is every team's experience. In these moments, our future engineers are unsure how their project will unfold. This is exactly what we want to capture in the St. Thomas Senior Design Clinic: how to gain new skills outside of the classroom, in planning, in budgeting, and in working on a real-world problem that has no obvious or pre-determined solution. The beauty of the Senior Design Clinic is when the comforts of well-defined textbook problems are abandoned; real engineering emerges. What you see in these pages is the manifestation of this uncertain process, which translates ideas into reality.

In short, what you see here is engineering!

On behalf of the School of Engineering faculty, I would like to thank you for coming today. We are grateful for the support of the sponsoring companies and organizations who have committed their funds, equipment, and time, to make this a truly great experience for our students. We are especially grateful for the support of the family, friends, and mentors on whom each of our seniors has relied, to reach this point in their incredible life journey.

Again, thank you and enjoy!

Dr. Don Weinkauf - Dean of Engineering

School of Engineering

UNIVERSITY OF St.Thomas

EEG EYEWEAR

From left to right: Karl Shlanta, Mitchell Koebnick, Alexander Pedersen, and Jacob Modjeski

TEAM 1

INDUSTRY REPRESENTATIVE
Medibotics
Dr. Robert A. Connor

FACULTY ADVISOR
Brad Reinboldt

PROJECT SUMMARY

Generally, Electroencephalography (EEG) technology used for continuous monitoring falls into one of two different categories. The first is large alien looking devices that are accurate but very obtrusive. The second is small discrete devices that collect poor data. The Medibotics EEG Eyewear combines the accuracy of the first category with the discreteness of the second. EEG technology can be used to predict epileptic seizures and other ailments of the brain, but this requires the EEG device to be worn all the time. Since eyeglasses are a part of everyday life wearing this EEG device should seem commonplace making people likely to wear it all the time.

DESIGN GOAL

Improve the existing prototype's size and shape along with the reliability of sensor contact. Also improve the software to make demonstrations easier.

CAD model of EEG eyewear design.

DESIGN CONSTRAINTS

- Unobtrusive yet comfortable design to allow for the user and those around them to not notice the difference between the EEG Eyewear and normal eyeglasses.
- Consistent sensor placement to allow for accurate data.
- Adjustable to fit 90% of adult head sizes
- Battery life of at least 8 hours to last the typical span of a work day
- Bluetooth capability

BRUSSELS SPROUTS HARVESTER

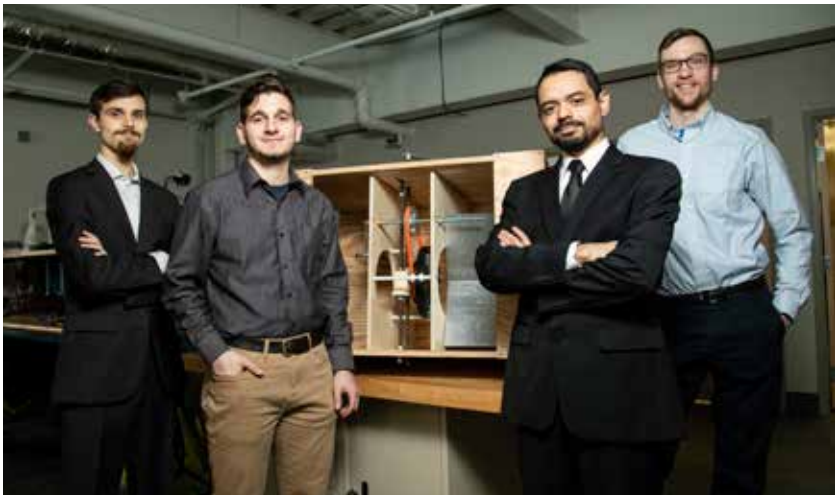

From left to right: William Frost, Milad Audi, Jose Henriquez, and Nathan Jones

HMONG AMERICAN FARMERS ASSOCIATION

TEAM 2

INDUSTRY REPRESENTATIVE
Hmong American Farmers Association
Janssen Hang

FACULTY ADVISOR
Dr. Kundan Nepal

COMPEER FINANCIAL

Financial support provided by Compeer Financial.

PROJECT SUMMARY

Farmers at the Hmong American Farmers Association (HAFA) farm grow brussel sprouts as one of their crops; however, they are unable to sell competitively due to the time and labor required for harvesting and sorting the sprouts at their relatively small scale. The farmers grow a variety of crops on 5-10-acre plots. The team was assigned with the task of designing and building a low-cost brussels sprouts harvester capable of debudding, trimming and sorting sprouts into different sizes. The machine shall be simple to use and capable of debudding two stalks within one minute.

DESIGN GOAL

To design a brussels sprouts harvester to help non-profit farms in the harvesting of brussels sprouts by increasing production while reducing harvesting time.

DESIGN CONSTRAINTS

- Low manufacturing cost
- Ease of use, training should not take more than 15 minutes
- Materials for manufacturing the machine should be food-grade
- Proper safety measurements to prevent injury to user and consumer
- Machine shall debud 2 brussels sprouts stalks per minute

Mechanism of brussels sprouts harvester prototype

LOCAL CHANGEMAKING

ANTLIGHTS: INNOVATIVE BICYCLE LIGHTING SYSTEM

From left to right: Charles Black, Grant Barland, Kyle Wyatt, and Revae Buckeye

TEAM 3

INDUSTRY REPRESENTATIVE
Medibotics
Dr. Robert Connor

FACULTY ADVISOR
Andy Tubesing

PROJECT SUMMARY

Phototropism, or the "moth effect", is the tendency for someone to focus on a single light alone in the dark. Unfortunately, most of the bicycle lighting market today is a single light attached to the rear of a bike. Drivers tend to focus more on the light instead of keeping away, like its intended purpose. That is where Antlights comes into play. Antlights incorporates a laterally moving sequence of lights that can be seen from 360 degrees. Similar to police cars or traffic indicators on the highway, Antlights uses dynamic lighting to mitigate phototropism and improve rider safety.

DESIGN GOAL

The design goal is to mitigate phototropism by introducing a laterally moving sequence of lights that can be used by bikers to decrease vehicle-to-bike accidents.

DESIGN CONSTRAINTS

- Product does not impede user's movements while riding or mounting the bike
- Functions under wet weather conditions
- Weighs less than 5 pounds and is smaller than 18 inches wide
- Portable
- Rechargeable power source with at least 6 hours of battery life
- Easy installation
- More noticeable to motorists than standard red light

Handlebar mounted turn signals and control box.

Rear enclosure for lights and battery.

SMART TEMPERATURE SENSOR HEAT DISSIPATION

From left to right: Kyle Olsen, Jacob Rear, Amy Tinklenberg and Grant Gunderson

TEAM 4

INDUSTRY REPRESENTATIVE
Emerson
Jason Rud

FACULTY ADVISOR
Brian Plourde

PROJECT SUMMARY

Emerson's original temperature sensor design required an extra attachment at the top of the sensor for housing the electronics used in temperature readings. By studying the existing design through experiments and simulations, the team developed an understanding of how heat travels throughout the current sensor design. With this understanding and the simulations validated with experimental values, new designs were created. These designs eliminate the need for a separate housing attachment for the electronics by insulating the internal space of the sensor, allowing the electronics to be safely placed inside the sensor adapter even when the assembly is exposed to extreme temperatures.

DESIGN GOAL

The goal of this project is to dissipate heat from the main body of the sensor in order to place the electronic board inside that body, thereby removing the need for a separate housing unit for the electronics.

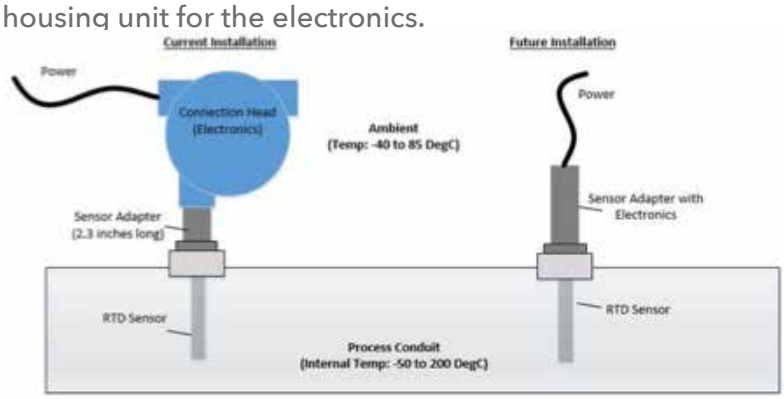

Diagram of current sensor versus goal for new sensor design.

DESIGN CONSTRAINTS

- Washdown, dust tight
- External material of sensor adapter made of metal
- Electronic board: Cross-sectional Area: 1.936 in2, Depth: of 0.6 inches
- Max adapter length: 5 inches
- 2-inch sensor
- Passive heat dissipation
- Explosion-Proof Requirements
- Sensor adapter minimum wall thickness=0.035 inches
- Sensor adapter maximum volume capacity=100CC

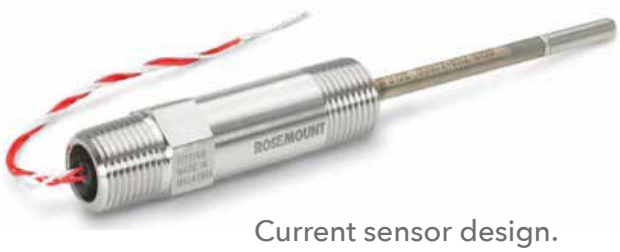

Current sensor design.

IMPLANTED DRUG PUMP REFILL

From left to right: Tyson West, Kirsten Ecklund, Asher Floyd, and Jordan Ferrazzo

Medtronic
Further, Together

TEAM 5

INDUSTRY REPRESENTATIVE
Medtronic
Nick Whitehead

FACULTY ADVISOR
Paul Chevalier

PROJECT SUMMARY

Medtronic's Implanted Drug Pump is a medical device used to gradually release a small dose of a prescribed medication directly to the central nervous system typically to treat patients suffering from chronic pain or spasticity. When refilling the pump, there is a risk of injecting the drug underneath the skin rather than into the pump. This is called pocket fill and can cause severe health risks. The goal is to design an exploratory testing device that includes technology that provides accurate feedback regarding the needle positioning and pump reservoir volume.

DESIGN GOAL

The goal of the project is to deliver a learning vehicle with the capability to record data from at least three sensors which have potential to confirm proper filling.

Drug pump's placement in the body.

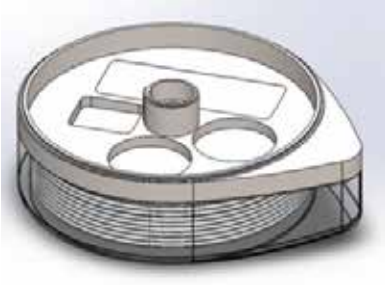

Model of learning vehicle to be used for drug pump sensor testing.

DESIGN CONSTRAINTS

- The system shall detect proper filling of drug into the reservoir.
- The system shall provide the user with a positive indication of proper filling during the refill process.
- The existing pump profile and volume shall be maintained following the inclusion of refill confidence feature.
- The refill confidence feature shall withstand a minimum of 500 refill septum-puncture cycles.
- The refill confidence feature shall withstand a minimum of 250 reservoir bellows cycles (full to empty).
- The refill confidence feature shall not exceed average current drain of 2 µAmp.
- The refill confidence feature shall operate within a voltage range of 2.5 to 3.3 Volts.

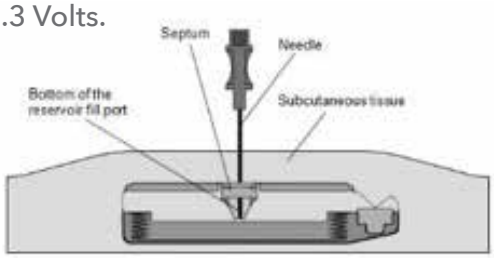

Profile view of drug pump refill process.

BASIC UTILITY VEHICLE DESIGN COMPETITION

From left to right: Janelle Mueller, Darya Klimok, Cooper Gray, and Joshua Niemeyer

School of Engineering | UNIVERSITY OF St.Thomas

TEAM 6

INDUSTRY REPRESENTATIVE
University of St. Thomas
Special thanks to
Poclain and Power Systems for
assistance with hydraulic system needs.

FACULTY ADVISOR
Andy Tubesing

PROJECT SUMMARY

The Basic Utility Vehicle (BUV) project is centered around a competition that takes place in Ohio put on by the Institute of Affordable Transportation. The competition was created to promote the design and production of BUVs that can then be employed in developing countries for the betterment of impoverished communities and farmers. Last year, St. Thomas built their very first BUV and placed second overall in the competition. This year, the primary goal of the project is to improve the speed of the vehicle in hopes of a top prize at the competition this year. Secondary goals include improving the ergonomics of the vehicle, enhancing manufacturability, and optimizing the cost.

DESIGN GOAL

Increase the speed of the vehicle while maintaining the vehicle's advanced capability to navigate difficult terrain.

DESIGN CONSTRAINTS

- Must be powered using an 11 horsepower, unmodified engine
- Must be able to carry 165 gallons of water
- Must be able to fill/empty 3 55-gallon drums with water within 15 feet of the pond
- Must have redundant breaking system
- Must be able to navigate through difficult terrain

Photo of BUV chassis and powertrain.

GLOBAL CHANGEMAKING

NEXT GENERATION SOIL CONDITIONING APPARATUS

From left to right: Shelby Stalberger, Justin Magoline, Chris Mueller, Derrick Bizer, and Travis Olesen

UNIVERSAL ENGINEERING SERVICES

TEAM 7

INDUSTRY REPRESENTATIVE
Universal Engineering Services
Matthew Michel

FACULTY ADVISOR
Dr. Christopher Haas

PROJECT SUMMARY

Create an all-encompassing soil conditioning device that can lift rocks from the soil, sort them according to size, crushing those within a specified size window, and redistribute those crushed rocks back into the soil in an effort to optimize the soil conditioning process and combat soil erosion.

DESIGN GOAL

Create an integrated prototype that can sort an input of rocks, crush appropriately sized rocks, and redistribute them back into the soil.

CAD rendering of the Next Generation Soil Conditioning Apparatus prototype.

Back side view.

DESIGN CONSTRAINTS

- The solution shall use rocks from 2 to 20 inches in diameter as an input.
- The solution shall sort large rocks (6-20 inches) into a separate container.
- The solution shall decrease the time of the rock picking process by 25%.
- The solution shall have integration to the power systems provided by a tractor. Size/category will be determined by design of subsystems.
- The solution shall crush rocks to an acceptable size below 2 inches in diameter.
- The solution shall redistribute the crushed rocks evenly back into the soil at a width of 25 ft.
- The solution shall be serviceable/maintainable on farm with standard power tools.
- The solution shall hook up to a standard pintle hitch.
- The solution shall comply with both OSHA and NRCS regulatory standards.
- The solution shall be capable of continuous, all-day operation in a wide variety of climates including both dry and wet conditions.
- The solution shall be capable of operating in temperature ranges between 32F & 120F.

HIGH VELOCITY AIR FILTER RETENTION DEVICE

From left to right: Zachary Boughton, Jessalyn Cox, Marcus Rein, and Jacob Carlson

3M Science. Applied to Life.™

TEAM 8

INDUSTRY REPRESENTATIVE
3M
JB Stender

FACULTY ADVISOR
Robert Bach

PROJECT SUMMARY

Most current air filter designs do not include a method of mechanically fastening the device to the air duct (via clamps, adhesive, set screws, etc.). Rather, the filters are slid into channels or held in place by their own weight. This can cause problems in the case of duct inlets that do not have a support flange at the back side of the filter to keep it in place. These current methods leave potential for the air filter to be sucked into the duct or allow unfiltered air to pass around them.

DESIGN GOAL

This project is aimed at developing a method of retention that temporarily enables the air filter to be attached to the air ducts for at least 30 days. The solution will be implemented on one specific size of duct air filters. The solution may be able to be adapted to fit other sizes of air filters.

DESIGN CONSTRAINTS

- Ability to retain an air filter exposed to high face velocities.
- Easily installed by an operator without access to tools.
- Resists corrosion in a moderate heat/ high moisture environment.
- Cannot support combustion if exposed to an ignition source.
- Low manufacturing and material costs.

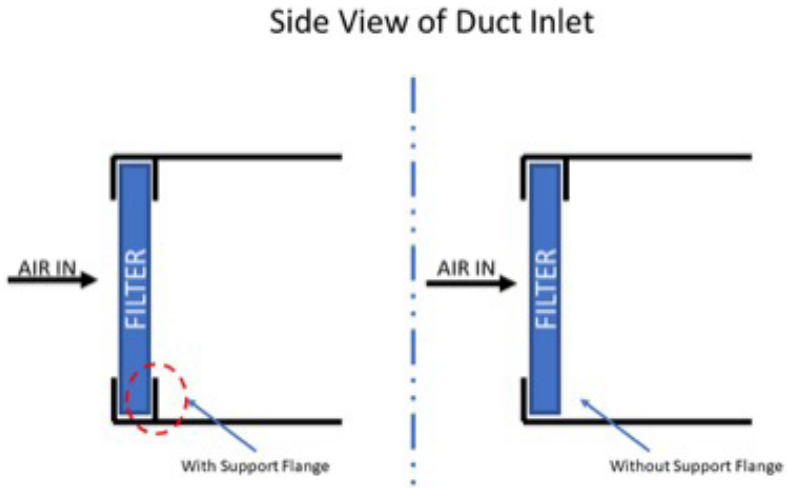

Illustration of the current problem of the missing back support flange that is seen in many ducts.

EARTHSPARK CLEAN ENERGY MICROGRID CUSTOMER KIOSK

From left to right: Tony Nguyen, Trevor Tracy, Carol Mikhael, and Tanner Kimball

TEAM 9

INDUSTRY REPRESENTATIVE
EarthSpark international
Madison Sturgess

FACULTY ADVISOR
Dr. Mahmoud Kabalan

PROJECT SUMMARY

EarthSpark would like their microgrid customers to access a variety of information pertaining to their electricity consumption. Customers of EarthSpark should be able to navigate the software easily in order to access the information they desire. The kiosk is expected to withstand a variety of environmental factors including heat, precipitation and sunlight. The product must be rigidly attached to the concrete building where it resides and contain a locking component in order to avoid theft. The design must also operate 24/7 outside the building and be protected against power outages and surges.

CAD Mounting Structure

DESIGN GOAL

Design a system that users in Les Anglais, Haiti will effectively and efficiently use to learn and understand the varying information relating to their electricity provided by EarthSpark.

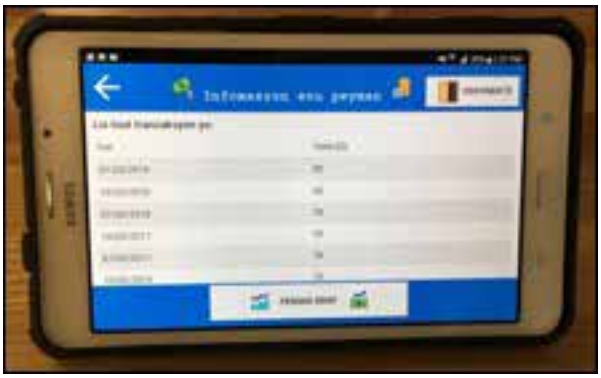

Custom Android App Running on the Tablet

DESIGN CONSTRAINTS

- $250 budget per kiosk.
- Must have a level of water resistance for outdoor, coastal environment in Haiti.
- Materials and building techniques available in Haiti.
- Application available in English, French, and Haitian Creole.

PELVITAL TEST FIXTURE

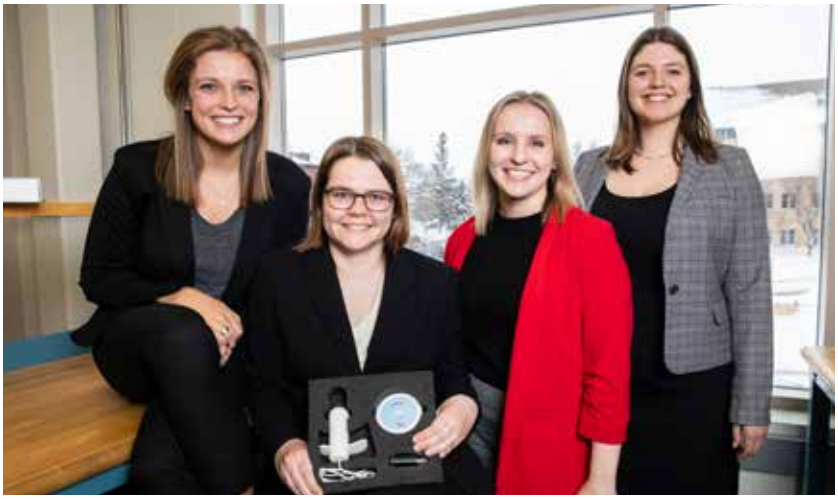

From left to right: Meghan Matthews, Anna Buelt, Annabelle Hamilton, and Elizabeth Rubbelke

Pelvital

Restoring Pelvic Health

TEAM 10

INDUSTRY REPRESENTATIVE
Pelvital USA, Inc.
Luke Dery

FACULTY ADVISOR
Dr. Todd Jones

PROJECT SUMMARY

Pelvital, USA, Inc. is designing a female health device that aims to treat stress urinary incontinence by using vibrations at a specific frequency to strengthen the pelvic floor muscles. Stress urinary incontinence is a condition that causes unwanted leakage from everyday activities. It affects 1 in 3 women, commonly due to child birth, obesity, or age. This team has been tasked with engineering a research tool and test fixture to measure the energy delivered to the pelvic floor muscle and to ensure the quality of the Pelvital device and the safety of the patient by measuring the force output from the device.

DESIGN GOAL

The goal of this project is to design and build a test fixture to measure the force output from the Pelvital device.

DESIGN CONSTRAINTS

- The test fixture shall measure the transfer of force from the device
- The test fixture shall gather and display accurate data when the unit is vibrating at a frequency of up to 50 Hz
- The design must account for changes in diameter and length of ± 0.5 inches of the Pelvital device
- The test fixture procedure must be clearly understood after reading the user manual or being trained
- The clamp design shall be durable for repeated use and easy to attach and detach from the device

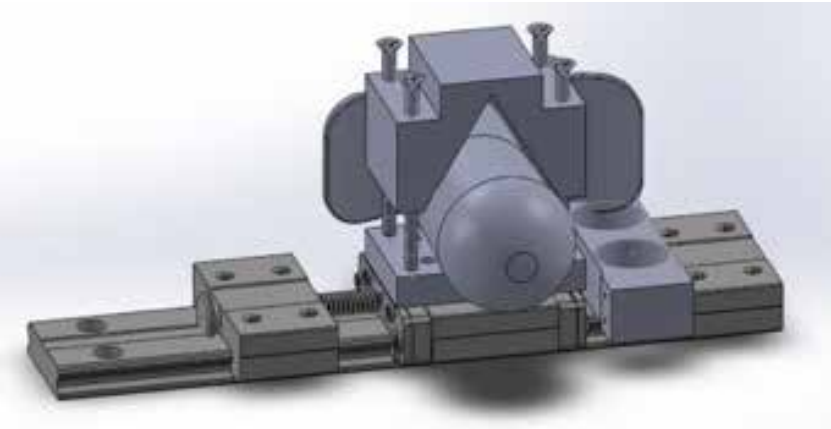

The SolidWorks design prototype of the test fixture

Assembled Pelvital Probe Unit and Display and Control Unit

GRACO QUICK CONNECTING DISPENSE VALVE TEST FIXTURE

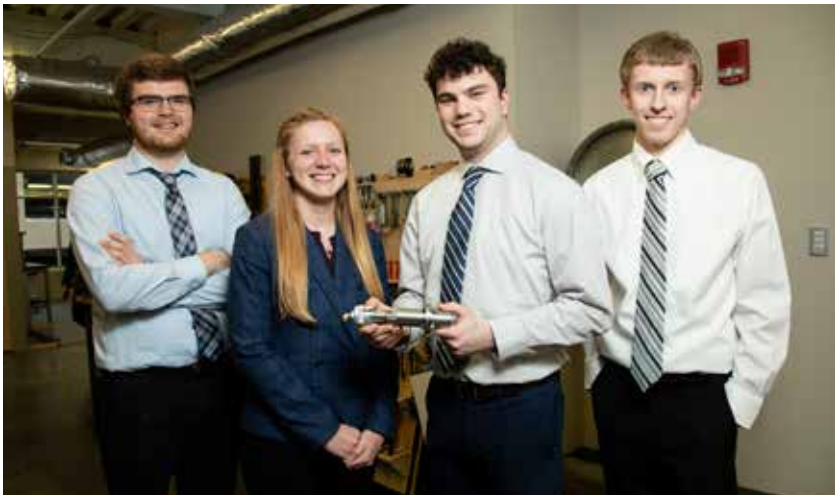

From left to right: Jonah Bensen, Alexa Lyng, Christopher Winslow, and Collin Olson

GRACO

TEAM 11

INDUSTRY REPRESENTATIVE
Graco Inc.
Logan Klaers

FACULTY ADVISOR
Dr. Thomas Shepard

PROJECT SUMMARY

Graco Inc, a local fluid handling equipment supplier and manufacturer, produces a mechanism called a proportioner valve, which mixes two materials together at a consistent ratio. These valves currently take at least two minutes to test, and thousands of these valves are tested each year, taking up a significant amount of time, money, and effort. This project was to create a new test fixture that could perform an entire leak test (connect, test, and disconnect) in under one minute. The new fixture not only reduces testing time but also reduces physical strain on the technicians' hands and requires no additional tools to operate.

DESIGN GOAL

The design goal of this project is to create a test fixture that can test one of Graco's proportioner valves in under one minute.

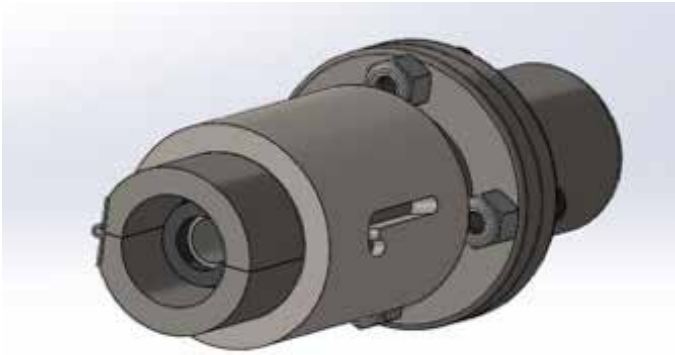

CAD model of new test fixture

Graco's proportioner valve test bench with new test fixture

DESIGN CONSTRAINTS

- The fixture shall test a valve in under one minute.
- The fixture shall within the 1' x 2' x 8" bounds of the test bench at Graco.
- The fixture shall withstand 3000 psi of oil pressure.
- The fixture shall weigh less than 20 lbs.
- The fixture should attach without the use of hand tools or power tools.

DYNAMIC ORIENTATION SYSTEM

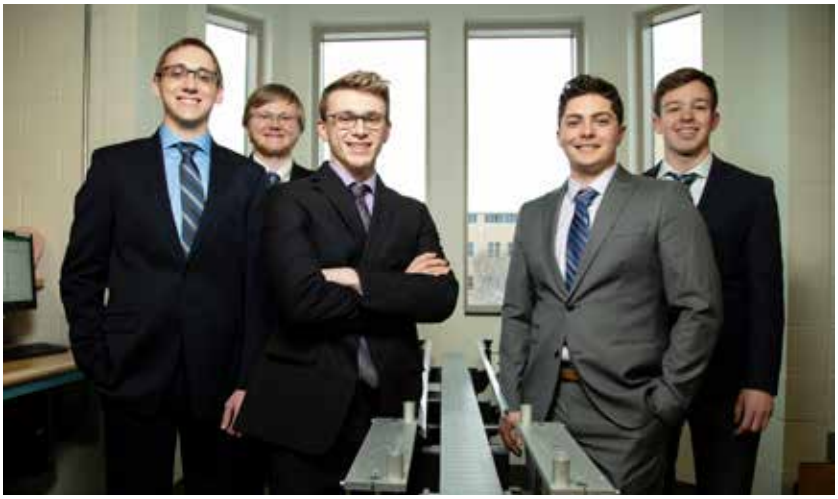

From left to right: Taylor Gray, Henry Bagstad, Kyle Schneider, Joshua Gish, and Nicholas Schlichter

TEAM 12

INDUSTRY REPRESENTATIVE
Accraply
Dustin Anderson

FACULTY ADVISOR
Scott Christenson

PROJECT SUMMARY

This project will be integrated into Accraply's current labeling system that applies product labels to containers such as bottles and cans. This system does the orientation part of the labeling process which allows labels to be in the correct orientation. It improves on current solutions by using machine vision to detect the orientation of the product. This allows for one system to be able to orient a variety of container sizes and shapes. To orient the container, two motor driven side belts are used to turn the container to a desired position so a label can be applied.

DESIGN GOAL

The system was designed to orient at least 100 products per minute as they travel down the conveyor at an adjustable line speed. The goal was to create a design that uses minimal conveyor line area while still performing to Accraply's standards of speed and accuracy.

DESIGN CONSTRAINTS

- The system must be able to orient at least 100 products per minute
- The system shall function with various sized containers
- The system shall work at varying conveyer speeds
- The system can be easily assembled and mounted to existing Accraply conveyor
- The system shall be user controlled through a touch screen interface

CAD model of Dynamic Orientation System

ULTRASONIC TRANSDUCER RESEARCH

From left to right: Matthew Heutmaker, Charles Capron, Annie Thompson, and Mohammed Al Sowaimel

GENERAL DYNAMICS
Mission Systems

TEAM 13

INDUSTRY REPRESENTATIVES
General Dynamics Mission Systems
Mike Eigenmann, Steve Fuchs, Pat Sullivan

FACULTY ADVISOR
Dr. Lucas Koerner

PROJECT SUMMARY

When buying electronics, there is an amount of uncertainty whether the parts are physically damaged or not to the point where the system does not work. In the case of higher level or sensitive applications, this uncertainty is unacceptable. One way to detect faults in electronic components is to use ultrasound. Much like a medical ultrasound, our system pulses very high frequency sound waves into an integrated circuit chip. The echo of these waves returns to the system and is analyzed by student-built software. By looking at the peaks and valleys of the returned wave, we can identify where there is physical damage and what type of damage has been done.

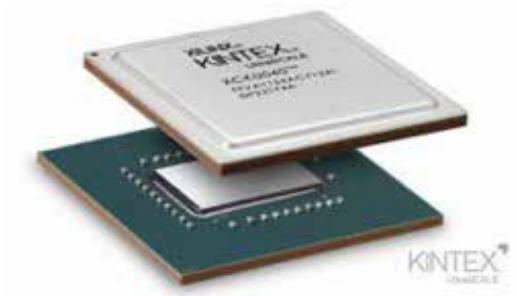

Integrated circuit chip.

DESIGN GOAL

The goal of this project is to develop a "proof-of-concept" system that could generate ultrasonic waves and analyze the returned wave echo for physical damage. This project is critical to reduce the uncertainty of physical damage and to improve production of integrated circuits in the future.

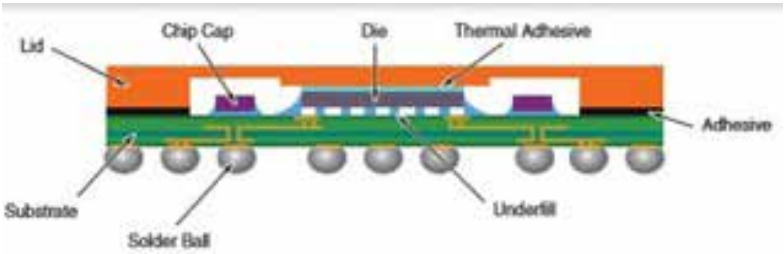

Cross sectional view of an integrated circuit chip.

DESIGN CONSTRAINTS

- System must provide a clear and easy to understand method for testing
- Documentation for the project must be clear and very explicit
- System must be able to conduct tests for many different kinds of faults

MAIZE BRAN DRYER FOR TANZANIA

From left to right: Nathan Hahn, Ashley Ell, McKenna Peplinski, Melissa Hammel, and Luther Miller

TEAM 14

INDUSTRY REPRESENTATIVES
Partners in Food Solutions
Clare Healy, Dave Cummings, Jesse Theis

FACULTY ADVISOR
Dr. Bob Mahmoodi

PROJECT SUMMARY

Sozi Integrity is a milling company located in Tanzania. They mill maize (corn) into flour, and also sun dry and sell the separated bran to animal feeds processors. During the rainy season – September to May - the environment is not conducive to sun drying, and therefore Sozi loses roughly 7 MT of maize bran daily, worth USD 833. In collaboration with Partners in Food Solutions and volunteers from Buhler, General Mills, and University of Dar es Salam in Tanzania our team worked on designing a scalable dryer that would ensure the dried bran revenue stream year-round, and reduce the food waste. This design was done to understand how each design component: lifters, temperature, air speed, the angle of descent, and rotation speed can affect the drying rate of the maize bran. Those components were analyzed by doing a test of a high and low setting for each component and comparing data to analyze which gave the better result from our prototype. The result of this project will be a drier design, which will then be fabricated at the University of Dar es Salaam, and replicated for many companies like Sozi across Tanzania.

DESIGN GOAL

To dry 50 pounds of maize bran in an hour from 40% moisture content to 13% moisture content.

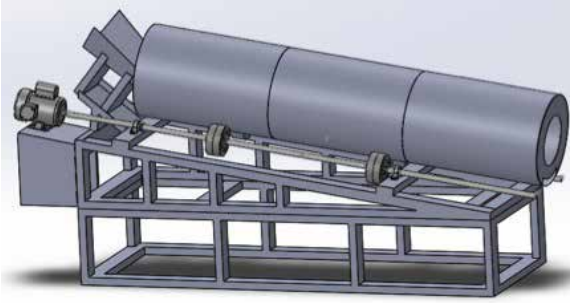

Solidworks Model of Dryer Design

DESIGN CONSTRAINTS

The constraints of our design were the requirement to dry the 50 pounds of maize bran in one hour to the 13% moisture content. We were also constrained by making the system continuous so that the material would enter and exit the system without needing to stop the dryer. In testing our design was limited by only having access to 500 pounds of maize bran, so we had to make sure we dried the material to acceptable moisture content at the end so that we could re-use the material for following tests.

MIDWEST SOLAR

From left to right: Alex Reyes, Lauren Bearrood, and Thomas Negaard

Pinnacle Engineering
Owning Challenges. Winning Trust.

TEAM 15

INDUSTRY REPRESENTATIVE
Pinnacle Engineering
Beth Keister

Shawn Markham
Soltek, LLC

FACULTY ADVISOR
Dr. Travis Welt

PROJECT SUMMARY

Midwest Solar is a solar field located in Minnesota; it covers approximately 900 acres of land and is one of the largest energy-producing solar farms in the Midwest. Annually, it produces enough energy to power over 20,000 homes. Since production began, the site has experienced difficulties resulting from the construction of the solar field – mostly related to excess water build-up under the panels due to soil compaction. The flooding has led to high maintenance costs, property damage, and a reduction in energy output.
The team has sized and designed stormwater retention ponds, replacing a minimal numbers of panels within the solar field. The use of the ponds allows a larger number of panels to operate year-round. Additionally, HydroBlox, a sustainably-manufactured drainage product, was utilized to remove precipitation from the site.

DESIGN GOAL

Due to the amount of flooding within the site during large storm events, the team focused on improving stormwater drainage while reducing maintenance costs and retaining or improving solar production. The team also incorporated environmental considerations and sustainability into the final design.

Drone Image of the Midwest Solar Farm

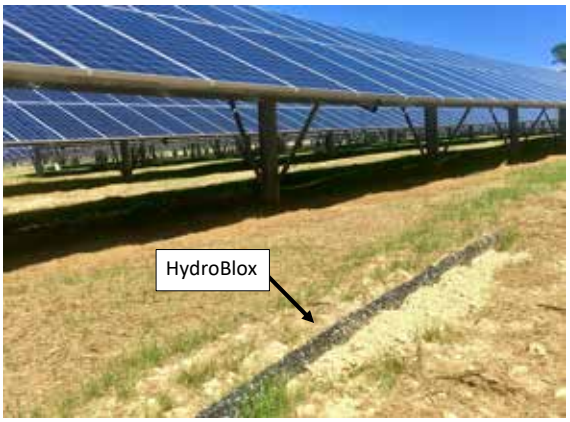

Photograph of Installed HydroBlox on a Solar Farm

www.hydroblox.com

DESIGN CONSTRAINTS

- Sponsor-accepted cost and payback period
- Solar energy production cannot be reduced by more than two-percent of total annual output.
- Designed ponds must account for the high-water table across a majority of the site
- Protected wetlands must be maintained
- Compliance with federal and local stormwater guidelines

ELECTRICAL SENSING FOR TREATMENT OF ATRIAL FIBRILLATION

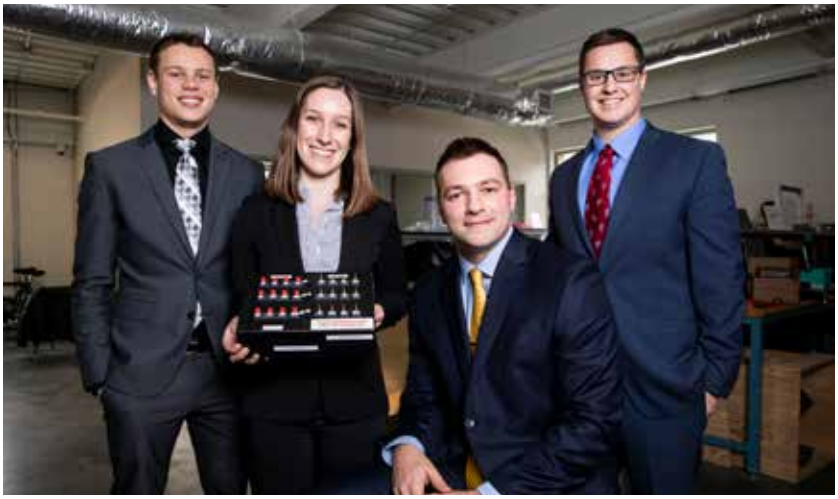

From left to right: Tanner Warner, Lauren Peltier, Alexander Eayrs, and Jason Tri

Medtronic
Further, Together

TEAM 16

INDUSTRY REPRESENTATIVE
Medtronic
Megan Schmidt

FACULTY ADVISOR
Dr. Ramesh Rajagopalan

PROJECT SUMMARY

The goal is to create a system that obtains signals (measuring resistance) from electrodes of a catheter used during a medical procedure to treat Atrial Fibrillation (AF). In this procedure, a balloon must completely occlude the pulmonary vein (PV) to efficiently freeze, and therefor treat, the tissue and stop the AF. Occlusion is seen as a change in impedance as the current passes through either the blood or the atrial tissue. If a lower impedance is seen the PV is not completely occluded. These signals need to be filtered of any unwanted noise and then displayed on a screen to be seen by the physician.

DESIGN CONSTRAINTS

- Interface with existing bioimpedance chip.
- Must work for up to 16 electrodes
- Eliminate all noise from system
- Isolate electrical components to eliminate signal interference.

DESIGN GOAL

Create a system that will obtain signals from a catheter used for a procedure to treat Atrial Fibrillation and display them on a screen for the physician.

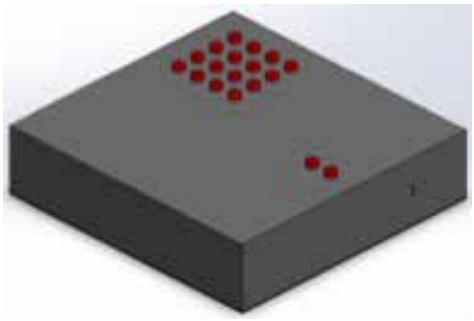

CAD model of mechanical enclosure for system.

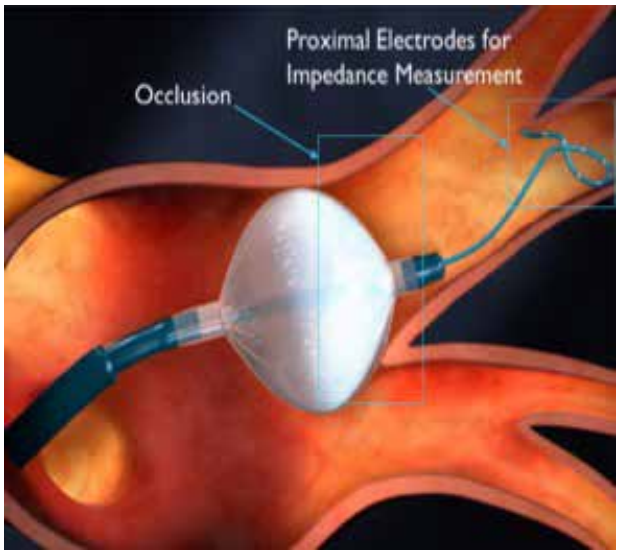

UST SMART CAMPUS TECHNOLOGIES INTERNET OF THINGS

From left to right: Nicholas Guggemos, Zachariah Pike, Abdulaziz Alkhalifah, and Peter Liffrig

UNIVERSITY OF St.Thomas

TEAM 17

INDUSTRY REPRESENTATIVES
University of St. Thomas
Information Technology Department
Ben Durrant and Greg Argo

FACULTY ADVISORS
Dr. Kundan Nepal
Dr. Chong Xu

PROJECT SUMMARY

The University of St. Thomas library staff identified an issue for students in which they spend unnecessary time searching the library for an open place to study, especially during midterm and final exam times. Working alongside them, we intend to improve the student experience by making data available to check if and where there are areas to study. Sensor 'nodes' will be installed throughout the library and real-time data will be returned to the University's cloud service, allowing students to view the occupancy status of certain resources in the OSF library. Data will also be recorded historically for the analysis of student behavior such that St. Thomas faculty can cater their resources toward usage patterns.

Case design prototype for study rooms

DESIGN GOAL

Design a low cost, modular, IoT (Internet of Things) sensor-based system that will monitor and collect data throughout the OSF Library. Data returned to St. Thomas cloud services include: occupancy of study rooms and tables, number of circulation and reference desk uses, total amount of foot traffic in and out of the library and the duration of use for each resource

DESIGN CONSTRAINTS

- Protecting student privacy
- Wi-Fi signal strength issues in certain library areas for transmitting data
- Small, secure and non-obtrusive housing for sensor nodes
- Large number of resources being monitored at the same time
- Different sensors and programming needed for each area based on physical environment and data collected

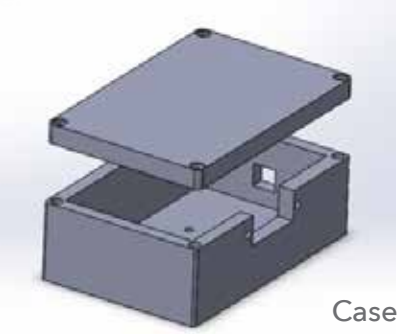

Case design prototype for front desk

RANGER XP® 1000 EPS NORTHSTAR SYSTEM OPTIMIZATION

From left to right: Jose Rocha, Ahmed Alkhalifah, Cole Jernberg, and Jeremiah Bonde

TEAM 18

INDUSTRY REPRESENTATIVES
Polaris Industries, Off-Road Division
Jacob Fahlsing, Chris Hurd, Chris Judson

FACULTY ADVISOR
Dr. John Liu

PROJECT SUMMARY

This project being implemented is to achieve comfortable temperature conditions during operation within the Polaris Ranger XP EPS NorthStar Edition. Temperature will be maintained with an upgrade to the current factory equipped HVAC system. Presently, the Ranger XP NorthStar takes approximately 40 minutes to reach an internal temperature of 78°F in a 90°F ambient environment while running at full capacity. With an expanding consumer base worldwide, the main goal is to increase the HVAC capability to achieve a cooler internal temperature more quickly.

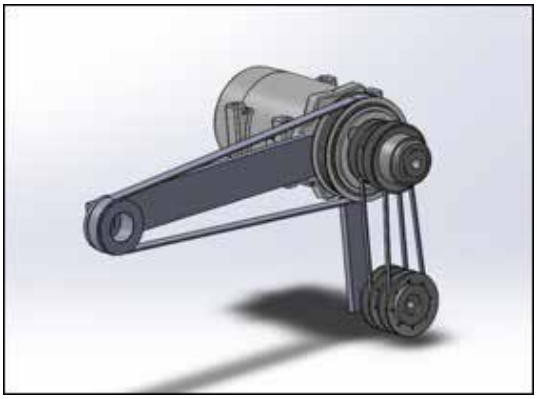

Pulley drive train design concept

DESIGN GOAL

The product design shall enable the cab enclosure to become 10% colder than the previous design when subjected to equivalent environmental conditions such that at 90F ambient, an internal temperature of approximately 70F can be maintained.

The product shall enable the cab enclosure to reach desired cool temperatures 10% faster than the previous design when subjected to equivalent environmental conditions.

The Polaris Ranger EPS NorthStar Edition

DESIGN CONSTRAINTS

- The product design shall not exceed the gross build price of $100.00 in materials and parts.
- The design shall be able to operate between –40°F and 140°F.
- Prototype shall conform to Polaris standard for operator's visibility.
- Prototype components shall not degrade in water, mud or other off-road conditions.

MATERIAL PROPERTIES OF WELDED JOINTS

From left to right: Eric Holst, Jacob Dailey, Saif Saifaee, and Thomas Pietsch

TEAM 19

INDUSTRY REPRESENTATIVE
Emerson Rosemount DP Level Products
Lauren Wickham Kolstad

FACULTY ADVISOR
Steve Albers

PROJECT SUMMARY

Emerson Rosemount aims to find a repeatable testing method to obtain the material properties of welded joints. Currently, their differential pressure transmitters undergo burst and pressure fatigue tests for quality assurance. This is a costly method for new product design.
Special dogbone specimens were created to separately test tensile and fatigue properties for welded stainless steel 316L and welded Hastelloy C276. These tests applied a load to stretch the dogbone specimens while a 3D camera recorded how the specimen stretched with the help of a spray-painted speckle pattern. This data was then analyzed to determine material properties. Finally, the material properties were used to replicate the tests virtually with finite element analysis modeling.

DESIGN GOAL

The goal is to create a test method to accurately obtain welded material properties that can be used for new part design.

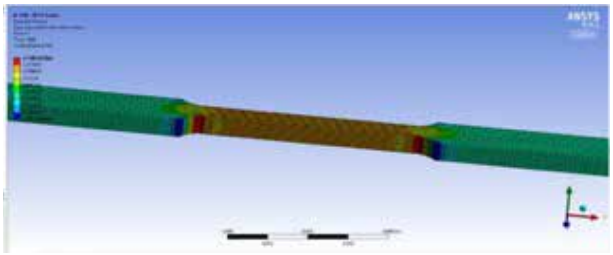

Strain prediction using Finite Element Analysis software, ANSYS.

MTS Criterion 43 Tensile Test Machine

DESIGN CONSTRAINTS

- Determine best method for finding welded material properties
- Experimentally find material properties of select welded metals
- Use measured material properties in simulation software

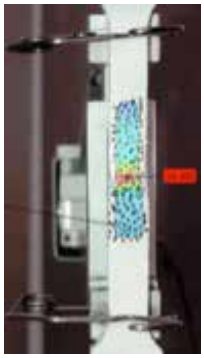

Strain measurement during tensile test

MULTI-CAMERA 3D RECONSTRUCTION

From left to right: Justin Klassen, Hassan Alkhalifa, Michael Efejuku, and Aleksey Garbaly

TEAM 20

INDUSTRY REPRESENTATIVE
Park Industries
Joseph Swanson

FACULTY ADVISOR
Anton Beck

PROJECT SUMMARY

Park Industries product line consists of various machines that perform the shaping and polishing of stone or granite slabs. To position these slabs on the CNC's bed, Park utilizes a laser that is mounted above the bed of their machine.

Rather than having the machine indicate where the operator must place the slabs, this project is designed to detect where the objects are through two solutions for Park Industries: the use of cameras and LIDAR.

The cameras are used in a process called stereophotogrammetry, where multiple images are taken of a given object and then are run through algorithms that result in a three-dimensional rendering of the object. It is done in a multistep process that first starts with calibrating the cameras to remove distortions that are found in their lenses. Once calibrated, the system finds common pixels and points in the images. With these common points found, it then builds a 3D point cloud that represents the common points in 3D. Finally, a mesh is created that joins these points together, resulting in a 3D object.

The LIDAR approach uses a laser to scan distances from a known point. The LIDAR determines these distances by calculating the difference in time between a transmitted pulse from the laser and when it is detected at a receiver. This distance information can then be used to determine the positioning of the objects on the machine bed and build a 2D rendering of the field.

DESIGN GOAL

Develop a system to replace the laser-based system that Park Industries currently uses with a system that can accurately represent the objects on their machine within an accuracy of 0.060 inches and for under $10,000 when fully implemented.

DESIGN CONSTRAINTS

- Cost under $10,000
- Capable of scanning an 8x8 ft. bed
- Produce a result in under two minutes
- Accurate to 0.060 inches
- Use only commercially available parts

The Titan 2800, one of the Park Industries' shaping and polishing systems. This system utilizes the laser technique for positioning the stone and granite slabs.

GENERATOR ACOUSTICAL BARRIER

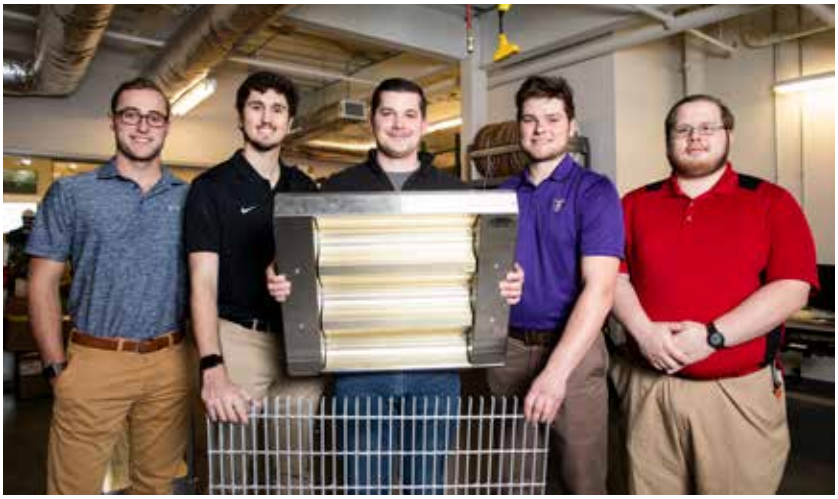

From left to right: Austin Burns, Luke Rachwal, Aaron Rasmussen, Samuel Supplee, and Garrett Uecker

TEAM 21

INDUSTRY REPRESENTATIVE
Great River Energy
Vince Herda

FACULTY ADVISOR
Dr. David Forliti

PROJECT SUMMARY

Great River Energy's Lakefield Junction Station is a natural gas peaking power plant in Trimont, Minnesota. The station is comprised of six 102 Megawatt turbine generators, each surrounded by large acoustical barriers. The acoustical barriers provide no overhead coverage for the area surrounding the generators, allowing snow and ice to accumulate in the area between the generators and the acoustical barriers. This poses a potential safety hazard for operators and prevents access to equipment at Lakefield Junction Station.

DESIGN GOAL

To design a system that either prevents snow from entering the enclosure or eliminates the potential safety hazard and allows for easy access to the necessary equipment.

Photo of snow accumulation inside the acoustical barrier.

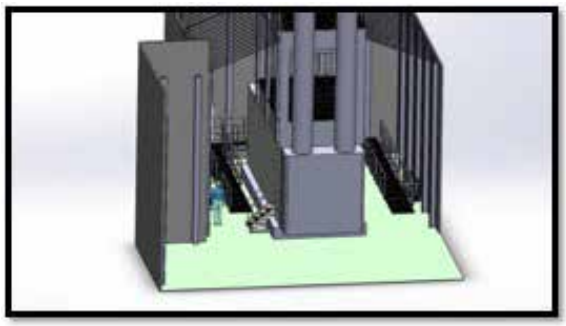

Model of acoustical barrier around the generator.

DESIGN CONSTRAINTS

- The system shall not impede the operator's ability to provide service or maintenance to any system inside the acoustical barrier.
- The system shall not allow for any packed ice or snow accumulation inside the enclosed area that the operators are required to walk on.
- The system shall not negatively impact or impede power producing capabilities of the generator units.
- The system shall abide by any and all state, local, and industry standards to ensure safe working conditions for the operators.

TACTILE DIAGRAM SCANNER

From left to right: Andrew Johnson, Jiaming He, Melissa Rose, Gabriel Rodriguez, and Samuel LeVoir

PROJECT SUMMARY

The tactile diagram scanner was created for SSB to digitally preserve original tactile diagrams which are tactile representations of visual learning components in textbooks such as graphs, pictures, and maps. By saving digital versions of the original physical diagrams, they are protected from damage and are more easily shared with teachers and students across the country. Our final design uses a laser to capture the features of the tactile diagram in a digital version. A gantry system is used to move the laser across the tactile diagram.

DESIGN GOAL

The goal of the scanner is to save digital replicas of original tactile diagrams. In doing so, the device will preserve tens of thousands of diagrams and countless hours of creation that help increase braille literacy and education for visually impaired students throughout Minnesota.

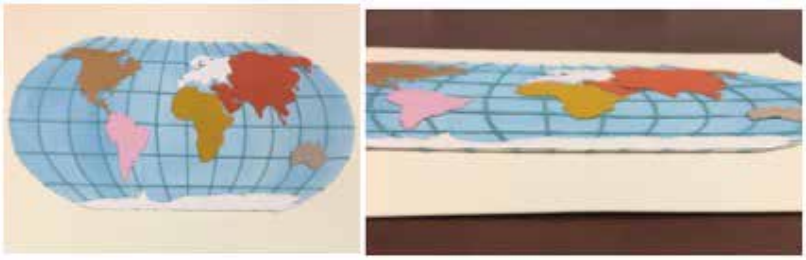

Front and side views of a tactile diagram mastercopy

EMPLOYMENT AND ECONOMIC DEVELOPMENT
STATE SERVICES FOR THE BLIND

TEAM 22

INDUSTRY REPRESENTATIVES

Minnesota State Services for the Blind
in Partnership with
the Dennis K and Vivian D Siemer Foundation
Dennis Siemer, Jay Maruska

FACULTY ADVISOR

Dr. Keith Berrier

CAD model of tactile diagram scanner

DESIGN CONSTRAINTS

- The device shall digitally replicate tactile diagrams
- The device shall not harm the original tactile diagrams in any way
- The device shall run on the US standard 120 Volts 60 Hz wall outlet
- The device shall not harm the user under normal operating conditions
- The device shall be durable enough to withstand 40,000 diagram scans

LOCAL CHANGEMAKING

DRIVER MONITORING SYSTEM

From left to right: Daniel Liepke, Andrew Rohkohl, Joseph Carlson, and Mark Swinehart

TEAM 23

INDUSTRY REPRESENTATIVE
VSI Labs
Sara Sargent

FACULTY ADVISOR
Dr. Cheol-Hong Min

PROJECT SUMMARY

The goal of this design project was to create a driver monitoring system that will help keep drivers focused on the road. This is especially necessary for partially autonomous vehicles that can give drivers a false sense of security. The system needs to be a realtime system so that the driver can know realtime that they need to refocus on the road.

DESIGN GOAL

Create a system that monitors the driver in partially autonomous vehicles to determine whether the driver is distracted. The Driver Monitoring System's purpose is to alert the driver in realtime when they are distracted, and to send that information to the sponsor's computer to be stored in their database.

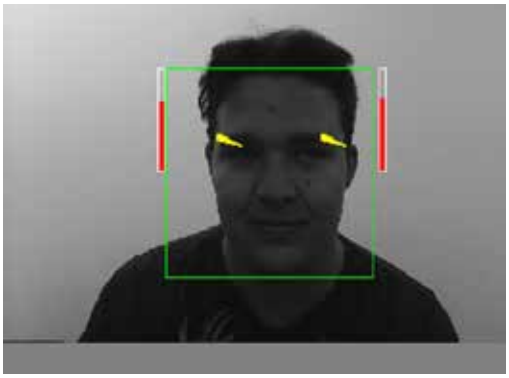

Reference Image showing gaze, blink, and facial detection

DESIGN CONSTRAINTS

- System shall correctly identify differences between distraction and attentiveness.
- The driver monitoring system shall respond to alert the driver after a second has past and the driver is still distracted.
- The driver monitoring system shall be unobtrusive (cannot block the driver's view or be distracting to the driver or other drivers).
- The final solution shall be capable of being installed into VSI Labs' Ford Fusion.
- The driver monitoring system shall send data to VSI Labs' computer (data will show whether the driver is distracted or not at minimum). Data shall be sent via USB, ethernet, or Bluetooth.
- The driver monitoring system shall be stable and able to run for 12 hours.
- The driver monitoring system shall be proprietary (end product has to be built and designed by St. Thomas Engineering group / cannot purchase a system currently on the market).
- The total budget for the project shall remain at or within $3,000.
- The system shall operate properly for both extremes of user height (min: eyes above steering wheel / max: head touching roof).
- The system shall operate properly both during the day and night.

BEACON AQUEOUS MICROSHUNT IMPLANT TOOL

From left to right: Ephraim Bird, Jenna Ramberg, John Paul Galgano, and Marissa Samuelson

MicroOptx

TEAM 24

INDUSTRY REPRESENTATIVES
MicroOptx, Inc.
Aaron Cohen. Steven Maurer

FACULTY ADVISOR
Dr. Hassan Salamy

PROJECT SUMMARY

The Beacon Aqueous Microshunt in a novel, implantable microshunt that utilizes microfluidics to normalize pressure inside the eye. It was developed to treat glaucoma, which is characterized by abnormally increased intraocular pressures. Glaucoma is the US and world's leading cause of irreversible blindness. Although the current implant procedure takes only 1 minute to perform, it currently requires an operating room, operating microscope, and a skilled surgeon to correctly place the device. With an implant tool, it is expected that the Beacon could be implanted outside of an operating room and potentially without a surgeon. Such an implant tool could make this technology much safer and has the potential to extend its use to developing regions where minimal to no glaucoma treatments are currently available.

DESIGN GOAL

To design and build a prototype tool that temporarily secures the implant, makes an incision into the eye, and places the Beacon within the eye's anterior chamber.

DESIGN CONSTRAINTS

- Tool is operable with one hand
- Implant is placed into eye with one function
- Fully secures implant until implantation
- Tool creates a 1.4 mm incision width
- Tool and implant can withstand transportation and storage

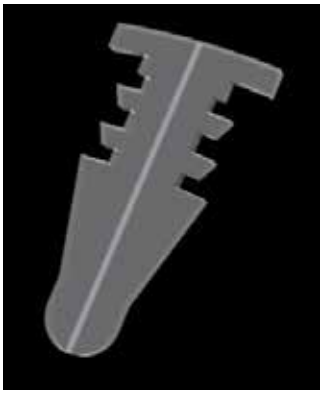

The Beacon

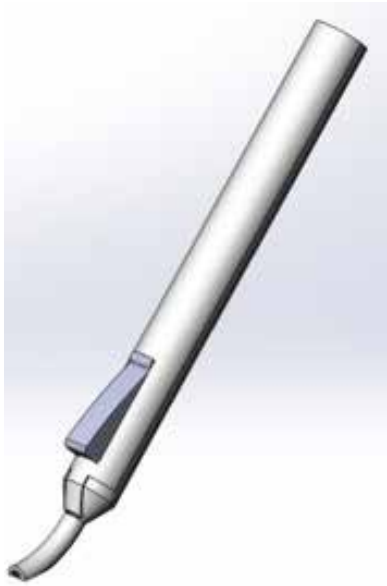

Beacon Aqueous Microshunt Implant Tool

ABRASION TEST METHOD FOR STRUCTURAL HEART DEVICES

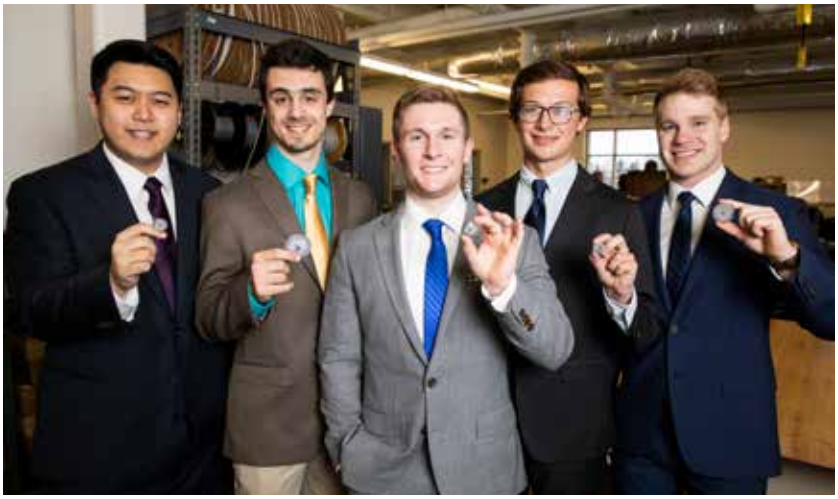

From left to right: Brian Li, Nicholas Poeschl, Samuel Wielgos, Scott Jevne, and Mark Ruhl

Abbott

TEAM 25

INDUSTRY REPRESENTATIVES
Abbott
Tracee Eidenschink, Alex Bloomquist

FACULTY ADVISOR
Dr. Thomas Secord

PROJECT SUMMARY

The team was tasked with developing a test procedure and/or equipment to determine tissue erosion or abrasion due to movement of a septal occluder. An implanted septal occluder can potentially move with respect to tissue adjacent the implanted occluder, thus abrading the tissue, which is to be avoided. Consequently, in designing septal occluders it is important to understand the tissue erosion/abrasion potential and to design an occluder that minimizes abrasion of the surrounding tissue. Therefore, a well-defined test method needs to be established, along with a device that accommodates at least 3 modes of motion, for testing different design occluders, for understanding the potential of abrasion in an environment simulating the human heart and the surrounding tissue.

CAD model of Structural Heart Erosion Assessment Device, front view

DESIGN GOAL

To design and fabricate a test station to test various motions of an implanted septal occluder on a selected surrogate material for abrasion with an abrasion criteria and specify the test method.

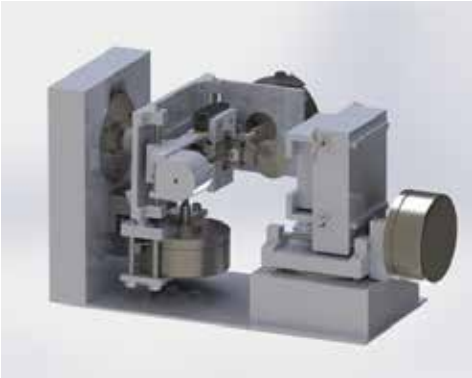

CAD model of Structural Heart Erosion Assessment Device, back view

DESIGN CONSTRAINTS

- The tester shall show differentiation between abrasion characteristics of tested products.
- The test station shall provide data to assist in the determination of abrasion on a selected/suitable material such as depth of abrasion for a given time or force over time or similar outcome.
- The product shall accommodate various sizes of occluders.
- The test station shall be maintained at body temperature (37 °C ± 2°C).

COUPLING ROBUSTNESS TESTER

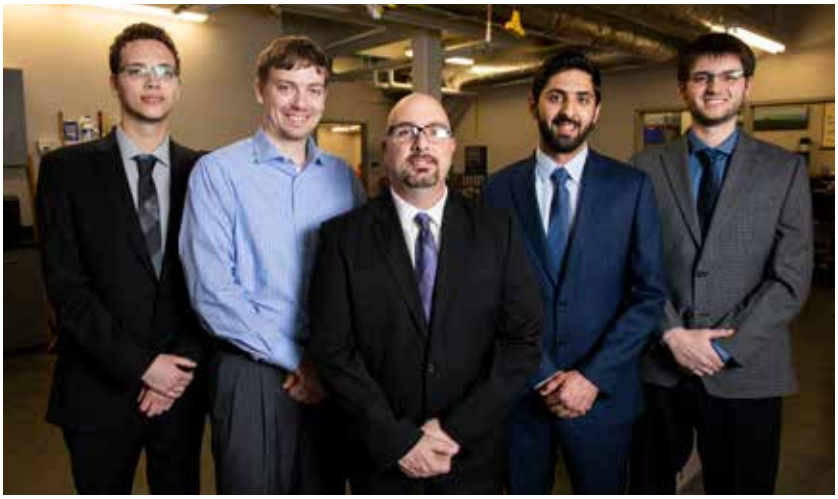

From left to right: Cory Weslander, Kenneth Gitter, Shawn Westring, Abdulaziz Alshaiban, and Adam Rodgers

TEAM 26

INDUSTRY REPRESENTATIVES
Colder Products Company
David Burdge, Mike Maleski

FACULTY ADVISOR
Ian Tran

PROJECT SUMMARY

Colder Products Company produces a line of quick disconnect couplers for liquid cooling applications known as the LQ series. These couplers are used in server farms to create modular cooling systems. The company has requested the assistance of a University of St. Thomas Design Team in designing and constructing a testing apparatus to test the robustness of the LQ series couplers. This apparatus, known as the Coupler Robustness Tester, will apply constant and varying side forces, varying temperatures to the exterior of the coupler, and varying temperatures and pressures to the interior water flow. The test data collected from the apparatus will help convey the robustness and thus the reliability of CPC's LQ series couplers.

DESIGN GOAL

The goal of this project is to test CPC's LQ series couplers to the point of part failure under varying test conditions and use the failure data to convey the robustness of the couplers.

DESIGN CONSTRAINTS

- Collect force, temperature, and pressure data upon coupler failure
- Be at a comfortable height for all operators
- Fit all LQ series couplers into apparatus

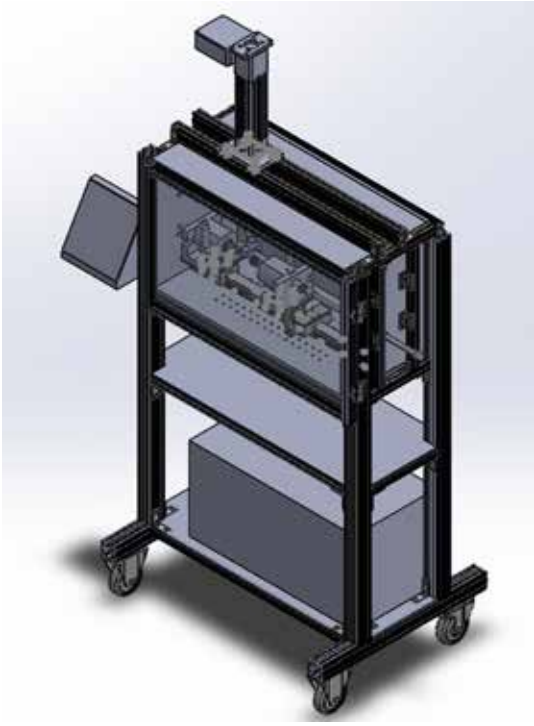

CAD Model of Coupler Robustness Tester

SILICON WAFER HANDLING SYSTEM

From left to right: Lucas Tucker, Jack Vogelgesang, Meghan Konop, and Austin Otto

POLAR semiconductor
AN ALLEGRO MICROSYSTEMS COMPANY

TEAM 27

INDUSTRY REPRESENTATIVES
Polar Semiconductor
Dan Foley and Mike Tippett

FACULTY ADVISOR
Dr. Jeong Ho You

PROJECT SUMMARY

Polar Semiconductor is a silicon wafer manufacturing company. During the manufacturing process, wafers travel around the facility and undertake various processing steps. The amount of times the wafers are moved increases the risk of damage due to machine and operator error. The current system used to transfer silicon wafers from process to process is operator dependent and each preprocess step puts the wafers at more risk. On average, twenty wafers per week are scrapped due to the high-risk handling processes. These losses lead to a significant financial loss for the company every year.

DESIGN GOAL

The goal is to design a handling system that decreases the possibility of wafer damage by reducing process steps and that senses operator errors prior to the occurrence of catastrophic failure.

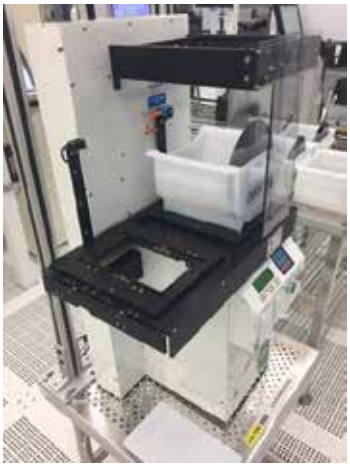

Wafer transfer equipment moves wafers to Teflon carrier.

DESIGN CONSTRAINTS

- The material must be Class 10 clean room certified, meaning the material sheds very few particles that could contaminate the wafers or wafer manufacturing environment.
- Components must be reliable, long lasting and must not add stress to the wafers in any way.
- Solution must integrate with existing transfer process machinery.
- Cost must be controlled to ensure the solution can be installed throughout the entire fabrication facility.
- New process must not add time to the existing intensive fabrication process.
- Solution will add fault detection for several common operator errors seen in current process.

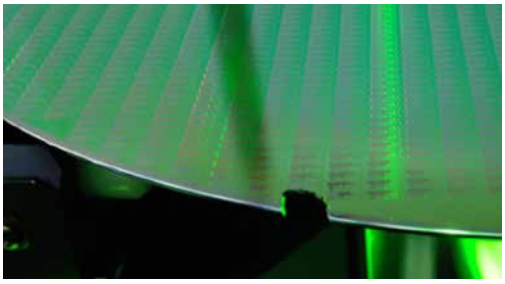

Wafer with damaged edge.

ORTHODONTIC ALIGNER REMOVAL FORCE MEASUREMENT

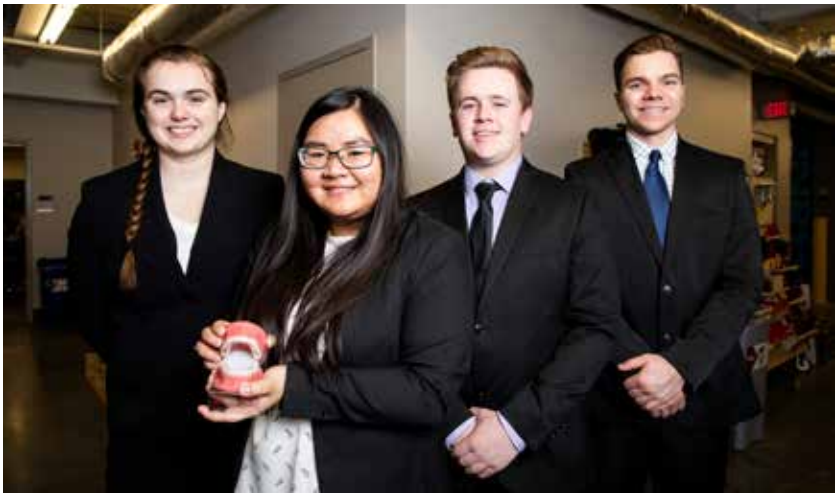

From left to right: Dana Connelly, Lam-Mien Tran, Collin Dworak, and Jared Anderson

3M Science. Applied to Life.™

TEAM 28

INDUSTRY REPRESENTATIVES
3M
Karl Geisler, Michael Domroese

FACULTY ADVISOR
Dr. Michael Hennessey

PROJECT SUMMARY

Unlike traditional metal or ceramic braces which are adhesively bonded to the teeth, plastic aligners rely on geometry and elastic properties to stay in place and exert treatment forces and moments on teeth. Patients are instructed to wear their aligners all day and night but remove them before eating or drinking. Aligner features are engineered to help aligners grip teeth more securely. As a result, in some cases aligners can be difficult for patients to remove. 3M's Oral Care Solutions Division seeks a quantitative method for evaluating the removal force of orthodontic aligners.

DESIGN GOAL

The goal of this project is to deliver a test fixture or fixtures and testing procedure that are compatible with 3M's testing equipment. This will allow for 3M to effectively evaluate the forces needed to remove aligners as the features of the aligners change.

DESIGN CONSTRAINTS

- Compatible with 3M's testing equipment
- Design shall be ergonomic and easy to use
- Test fixture shall give reliable and repeatable data
- Fixture shall be able to be compatible with a varying range of arch geometries

Orthodontic aligner patient

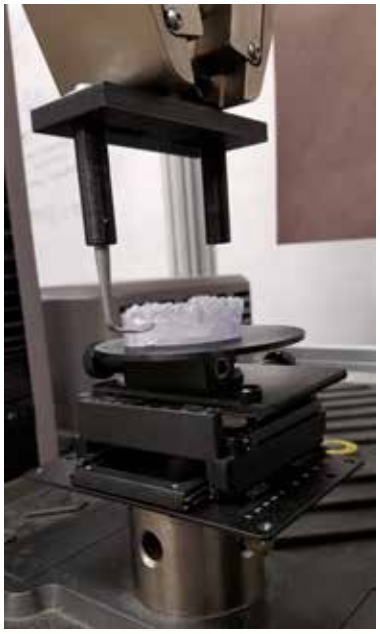

Orthodontic aligner force measurement device

ENERGY HARVESTING FAN DRIVE

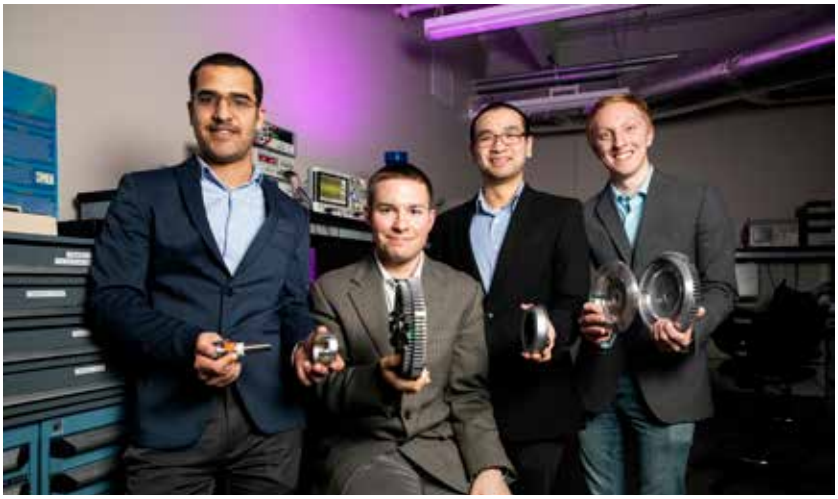

From left to right: Ali Alsagoor, Joseph Zinke, Brian Nguyen, and Alexander Zaic

TEAM 29

INDUSTRY REPRESENTATIVE
Horton
Dave Hennessey

FACULTY ADVISOR
Dr. Greg Mowry

PROJECT SUMMARY

The University of St. Thomas has partnered with Horton on the continuation of the Energy Harvesting Fan Drive project. Horton Inc. designs and builds viscous fan drives which transfers power from large diesel truck engines to the fans cooling them. Horton's viscous fan drive is an engine cooling solution that can help products last longer, run quieter, and consume less fuel. The current design utilizes an electromagnet to control the output speed of the clutch. This is done by releasing a viscous honey-like oil between two plates. The friction between the plates transfers the torque. It is desirable for this magnet to consume as little power as possible as this power must be provided from the clutch's host vehicle. The preceding team investigated Energy Harvesting methods to power the coil and found a viable solution by harvesting vibrational energy using piezoelectric modules. To continue the progress of making the Energy Harvesting Fan Drive self-reliant with the elimination of the original electromagnetic coil, a new method of actuating the release of oil into the clutch is needed to reduce the power consumed by the clutch. Horton's long-term goal is to produce a clutch which requires no external power to modulate the output speed of the clutch.

DESIGN GOAL

The goal of this design is to produce a functional prototype that can be actuated to control the release of oil from the oil reservoir to the viscous clutching fan drive. The prototype shall be tested at Horton's facility to verify the device's operation.

DESIGN CONSTRAINTS

- The device shall be able to withstand temperatures reaching 250°C
- The device shall have a controller that can output a pulse width modulated signal to control the actuating mechanism
- The device must have a failsafe characteristic such that when it fails, it will fail in the on position where oil is always being released
- The solution shall be able to fit in the original viscous clutch design

Exploded view of viscous fan drive.

ASHOKA U IS THE LEADING DESIGNATION FOR SOCIAL INNOVATION IN HIGHER EDUCATION

The University of St. Thomas is part of the Changemaker Campus Network, having received the ASHOKA U designation. Changemaking is embedded in our campus-wide culture, programs and operations.

Launched in 2008, Ashoka U offers the Changemaker Campus Designation to leading institutions in social innovation and changemaking in higher education. Changemaker Campuses empower students and all university stakeholders to be change makers, firmly embed changemaking into their culture and operations, and work to address both local and global challenges. They are re-envisioning the role of higher education and the university in society as major drivers of social impact.

Social innovation is the process of developing and deploying effective solutions to challenging and often systemic social and environmental issues in support of social progress.

As a social innovation organization, Ashoka U is not your traditional accrediting body with traditional goals. And, Ashoka U's Changemaker Campus is not your average designation.

Changemaker Campus is a community of leaders and institutions who work collectively to make social innovation and changemaking the new norm in higher education and beyond. The Changemaker Campus program seeks to select diverse institutions who:

- Represent higher education globally;
- Model campus-wide excellence in social innovation and changemaking; and
- Are committed to contributing to the field of social innovation and changemaking education and an Everyone a Changemaker™ world

These institutions collaborate with each other and Ashoka to advance social innovation and changemaking across higher education so that one day together we will be graduating millions of changemakers.

Rather than being an "end" in itself, the Changemaker Campus designation serves a strategic role in enabling the campuses to work collaboratively towards systems-level change in higher education through creating and spreading ideas, models, and practices that further the spread of social innovation and changemaking education globally.

Look for these logos throughout this guide.

SUMMER/FALL SENIOR DESIGN TEAMS

THE SENIOR DESIGN SHOW FOR THESE TEAMS TOOK PLACE IN DECEMBER 2018.







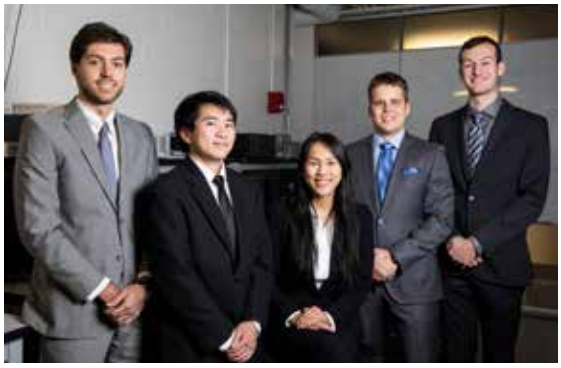

LASER SLUG DETECTION AND REMOVAL SYSTEM

From left to right: Alex Ilko, Saul Meraz, Katelyn Ruegsegger, Jason Petaja, and Daniel Szykulski

TEAM A

INDUSTRY REPRESENTATIVE
nVent
Nick Johnson

FACULTY ADVISOR
Dr. Surya Iyer

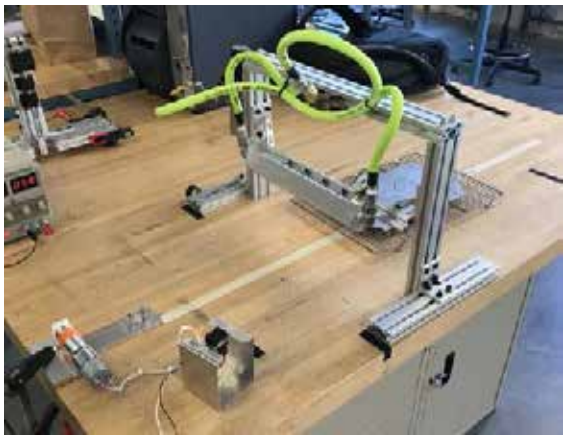

Removal System Initial Prototype – Air Knife

PROJECT SUMMARY

nVent has contacted Senior Design Team A to develop a solution for the existing problem with their fiber laser cutter on their electrical box production line. Currently, scrap metal (called slugs) can land on the surface or weld themselves to the sheet metal, which causes crashes in the machinery down the line if not removed. High-skill technicians currently remove the slugs by hand, and the new design will allow the technicians to be placed in more relevant roles.

DESIGN GOAL

nVent would like this design to focus on removing the slugs that are not welded to the surface of the sheet metal and detect the remaining slugs that are not able to be easily removed. At the end of the project, the senior design team will be giving nVent a small-scale prototype of both their detection and removal systems, a full bill of materials, and a complete design of the full-scale system that nVent can implement.

DESIGN CONSTRAINTS

- The design must be able to remove 95% of the slugs, and detect 100% of the remaining slugs
- The detection process must be able to detect welded slugs on both the top and bottom of the sheets
- If a slug is found by the detection system, it must be flagged for removal by an on-site technician
- The design must not damage the surface finish of the sheet metal
- The device cannot slow down the current production rate of one part per forty seconds.
- Would ideally fit into the current lock-out safety area

LOWER BODY DIFFERENTIAL PRESSURE CHAMBER

From left to right: Michael Blasucci, Eric Smith, Langston Wesson, Ben Steen, and Clayton Dosmann

MAYO CLINIC

TEAM B

INDUSTRY REPRESENTATIVE
Mayo Clinic
Tyler Van Buren

FACULTY ADVISOR
Paul Chevalier

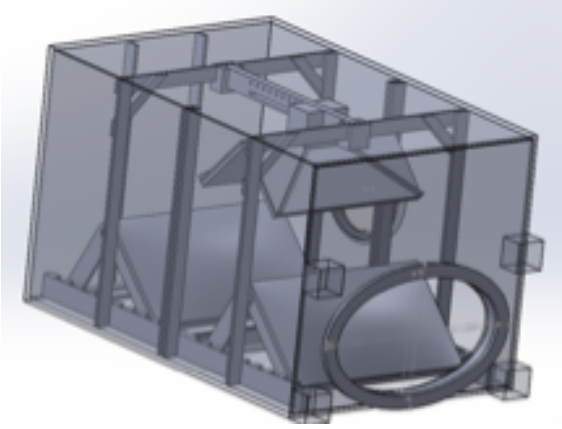

PROJECT SUMMARY

The LBDP Chamber is intended to be used as facilitating technology to electrocardiogram testing. Normally, to perform a dynamic electrocardiogram which can capture heart stress induced problems, exercise or drugs are utilized. This system will utilize positive and negative pressures applied to a patient's lower body to simulate aerobic stress or lowered vascular load. This type of solution is not available on the market today and targets obese and immobile patients or those for whom drugs are not a safe option.

DESIGN GOAL

The design and prototype will serve as a springboard for further development and production at Mayo Clinic. Valuable information including both successful and unsuccessful approaches to function, safety, and design will be delivered as part of a design history to promote the long-term success and marketability of this product.

DESIGN CONSTRAINTS

- Apply pressures to the lower body of a patient ranging from -100 to 60 mmHg
- Control with high accuracy in increments of 5 mmHg using closed loop control
- Design for patient and operator safety
- Can accommodate obese and immobile patients
- System can carry out 30-minute test intervals while maintaining patient comfort
- Lower body remains visible and can be interacted with through an access door

WIRELESS TETHER LOADING SYSTEM

From left to right: Jalen Betsinger, Clint Spitzer, and Nick Zhang

TENDYNE

TEAM C

INDUSTRY REPRESENTATIVE
Tendyne
Preston Huddleston

FACULTY ADVISOR
Dr. Christopher K. Haas

PROJECT SUMMARY

Our project aims at applying a wireless solution to measuring tension within a transcatheter mitral valve (TMVR) surgical application. TMVR offers a minimally invasive option to open heart surgery that can be beneficial to both geriatric and high risk patients. The system heavily relies on knowledge of tension in a tether attached to an artificial mitral value in the heart. The hemodynamic monitoring system runs a wire into a sterilization zone and into the device to display tension information to the physician. The proposed solution will help eliminate some challenges such as difficult and extensive preparation time, breaks in sterilization zone, and quicker prep-to-surgery time.

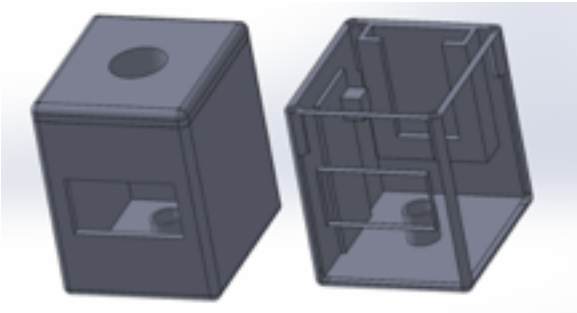

DESIGN GOAL

The tether loading system requires a physical tether to run from the surgical device to the hemodynamic monitoring system to display tension readings to the operator. This system creates challenges such as extensive preparation time and breaks in sterilization zone because of the inconvenience of a physical tether (cable) running from the surgical device to the hemodynamic monitoring system. Our goal was to replace the reliance on the hemodynamic monitoring system with a wireless solution, preserving the sterile operation zone and allow for easy setup.

DESIGN CONSTRAINTS

- Bluetooth Low Energy wireless communication replacing the hemodynamic monitoring system
- Improved tension measurement application with accuracy of 0.25 lbs.
- Monochrome 1.3" 128*64 OLED graphic display module

AUTOMATIC BACON BELLY DE-COMBING SYSTEM

From left to right: Matthew Beck, Paul Sonsalla, Haden Hausken, Preston Huddleston, and Peter Kayembe Mfuamba

HOEGGER

TEAM D

INDUSTRY REPRESENTATIVE
Hoegger Food Technology
Pius Eigenmann

FACULTY ADVISOR
Anton Beck

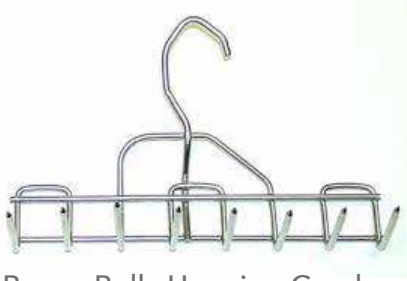

Bacon Belly Hanging Comb

PROJECT SUMMARY

Hoegger Food Technology requested that a team of engineering students from the University of St. Thomas design and prototype an automated system for the de-combing of bacon bellies. The new system integrated with the current production cycle will be able to perform the aspects currently used in the manual de-combing process without the use of manual labor.

DESIGN GOAL

Take the current manually labor-intensive bacon de-combing process and automate it to reduce the physical strain placed on workers performing this task. Use actuators to simulate the automated steps of the machine. Provide the ground work to allow for a fully-automated and production-ready machine to be integrated with current workflow of the bacon manufacturing process.

Bellies Hanging in Production

DESIGN CONSTRAINTS

- Ability to separate bacon belly and metal hanging comb.
- Ability to dispose of metal hanging comb in organized manner.
- Ability to dispose of separated bacon bellies in an organized manner.
- A prototype equipment price no greater than $3,000 USD.
- Overall size of machine shall be within 5 'wide x 7' tall x 10' long.
- Ability to remove combs at a rate of 15 bellies/min.
- Machine shall be independent of other steps of the production cycle.
- Machine shall be able to be integrated into the workflow of the production cycle.

UPDRAFT BIOMASS GASIFIER

From left to right: Taro Vue, Daniel Mahota, Razak Adeniji.
Not pictured: William Kidd, and Brianna Pint

TEAM E

INDUSTRY REPRESENTATIVE
Cummins
John Pendray

FACULTY ADVISOR
Dr. Tom Shepard

PROJECT SUMMARY

Biomass gasification is a known method of producing gas such as carbon monoxide from a process of slow burning renewable products such as sawdust or straw. Updraft gasifiers however are rarely seen on a commercial scale due to a built-up by-product of the gasification process called tar. This project will focus on simulating the effects of tar buildup in an engine bay and possible methods of tar mitigation.

DESIGN GOAL

The goal of this project is to test the theory that an engine will be able to continually run off the gas produced by an updraft gasifier without tar build up if tar is kept in vapor phase throughout the gasification process.

DESIGN CONTRAINTS

- Designed reactor system must able to be mobile.
- Design must have sensors indicating thermal readings in the reactor, test beds, and along piping.
- Design must have sensors to read pressure differentials at air inlet.
- System should be able to cool down to below 200°C within 10 minutes of an emergency shut down.
- System shall be cool to touch within 24 hours of operation cycle.

COUNT ME IN!

From left to right: Ryan Arland, Joseph Herbeck, Murad Abduselam, Lloyd Onwuneme, and Mashal Aljahdali

TEAM F

INDUSTRY REPRESENTATIVE
Wilson Tool
Tony Schwartz

FACULTY ADVISOR
Andrew Tubesing

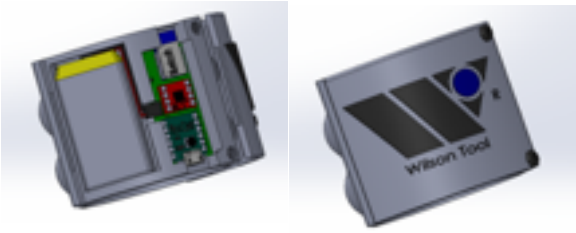

PROJECT SUMMARY

Wilson Tool has been in the machine tooling business for 56 years with over 20,000 customers. Many of those customers come to them to outfit their turret press machines with punching tools for cutting and bending metal. The average turret press machine performs 1 or 2 thousand hits each day and is equipped with several dozen different tools to fit any task. Tools wear out over time and need to be sharpened and eventually replaced to maintain a high standard of detail in every cut and bend. Though having so many tools to keep track of between all their machines can interfere with operators' ability to perform regular maintenance. This project focuses on eliminating the guesswork by implementing a device on every tool that will automatically track its status. With this technology, operators will be empowered to prevent tools from being used beyond their prime and ensure quality.

DESIGN GOAL

The goal of this project is to design a device that can be fitted to a turret press tool, track its condition, communicate that information back to the user, and survive for as long as possible on a single battery charge. The accelerometer translates the tool's motion into data which the microcontroller converts into a hit count. The Bluetooth module communicates how many hits a tool has undergone in its lifetime as well as since its last sharpening. This information helps the user decide when the tool needs maintenance or replacement.

DESIGN CONSTRAINTS

- Build a sleeve for the turret press tool that safely houses the electronics and ensures that the accelerometer reads accurately.
- The sleeve shall be strong enough to survive the rapid movement and pressure of the turret press machine.
- The design must have a thin enough profile such that it will not interfere with other tools inside the machine.
- Ensure that the device can maintain operation for a minimum of six months on a single battery charge.
- Hit counts shall be at least 98% accurate

JAMEED DEHYDRATOR

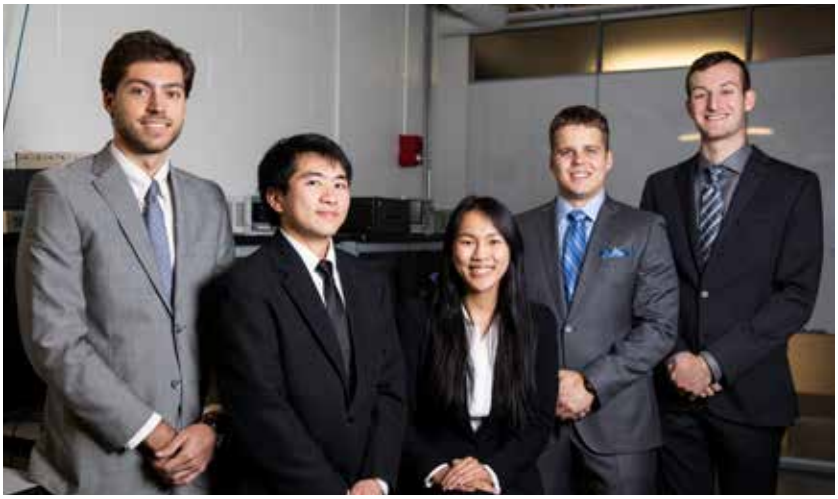

From left to right: Brett Marshall-Cieciuch, Derek Van, Kelly Mallon, Joseph Lee, and Nicholas Turch.

TEAM G

INDUSTRY REPRESENTATIVES
SIT in collaboration with
Nqaireh Women's Co-Operative

FACULTY ADVISOR
Dr. John Wentz

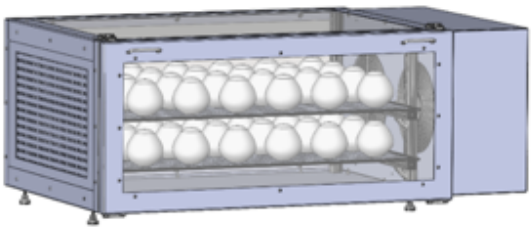

PROJECT SUMMARY

The University of St. Thomas is in collaboration with a Women's Co-operative to find a more efficient method of dehydrating jameed. Since jameed is currently only dried in the dry months of summer, these conditions must be replicated for year-round production.

Jameed is a sought-after food source that is currently dried naturally. This food is a heavily salted yogurt produced with goat's milk. It is used in many local dishes, specifically mansaf.

DESIGN GOAL

The goal of this design was to produce the first working prototype that will dry jameed under the design constraints listed. This prototype will be disassembled and shipped to the Women's Co-Operative to be reassembled in Jordan. There it will receive the final customer testing and critique by being implemented in the jameed production. Following that critique and feedback, a new senior design team will improve this design for the Women's Co-Operative. The improved design will bring it closer to a manufacturer ready prototype that can be produced in Jordan.

DESIGN STEPS

The design concept was first put through a Finite Element Analysis in ANSYS to understand the nature of the air flow in the prototype. Simultaneously, an experimental analysis of drying jameed was performed. It was concluded airflow and temperature had the largest effect on the overall drying process. Another ANSYS simulation was created and the results pointed the design to the SolidWorks model below. This model will hold the required 10 kg of jameed.

DESIGN CONSTRAINTS

- Fully dry 10 kg of jameed in 3 days
- Machine weight does not exceed 40 kg (movable by two people)
- Machine can be moved through a standard doorway
- Machine interface with the Jordanian electrical grid (230 V and 50 Hz)
- All parts manufacturable and available in Jordan
- Overall price to reproduce the machine between 500-1000 USD
- The design needs to be able to increase overall size and production, without conflicting the production rate

SENIOR DESIGN CLINIC GUIDEBOOK 2019

THANK YOU
TO OUR SPONSORS

3M Science. Applied to Life.™

Abbott

Accraply

CPC

Cummins

EarthSpark International

Sensors Integration

Werner Electric

General Dynamics Mission Systems

Graco

Hoegger

Great River Energy

Horton

TechnoServe

Compeer Financial

nVent

Hmong American Farmers Association

Mayo Clinic

Employment and Economic Development

MicroOptx

Medtronic

Medibotics

Partners in Food Solutions

Pelvital

Pinnacle Engineering

POLAR semiconductor

Polaris Industries Inc.

Park Industries

Emerson

SIT Study Abroad

Wilson Tool

Tendyne

Universal Engineering Services

VSI Labs

School of Engineering

University of St.Thomas