2020 SCHOOL OF ENGINEERING

SENIOR DESIGN CLINIC

School of Engineering | UNIVERSITY OF St.Thomas

2020 SCHOOL OF ENGINEERING
SENIOR DESIGN CLINIC

Welcome to the University of St. Thomas School of Engineering 2020 Senior Design Clinic. This book is just one part of celebrating the incredible accomplishments of our seniors. Through their hard work, they have developed into truly remarkable engineers. They hold the powerful combination of skills and character that will, without question, make the world a better place as they go forward from St. Thomas.

What you see in these pages are projects that were nothing more than ideas several months ago. From dreams to reality, from an industry problem to a working solution, these projects are the culmination of two semesters of hard work by St. Thomas School of Engineering seniors.

Each year, more than thirty companies and non-profit organizations engage our students with real-world engineering challenges. They ask, 'Is this possible?' and let the teams go to work.

The teams will say, 'At times the going gets tough'. It is every team's experience. And this year, with the adversity faced with the COVID pandemic it has been especially true. On reflection, each can take stock in the character traits of resiliency, perseverance, courage, patience, tolerance, and wisdom gained by facing not only the adversities inherent in project design, but also the external adversities brought on by the current pandemic.

While this spring was not what we planned, some of what is playing out is what we want to capture in the St. Thomas Senior Design Clinic. Students gaining new skills outside of the classroom, in planning, in budgeting, and in working on a real-world problem that has no obvious or pre-determined solution, and in adjusting to unforeseen circumstances. The beauty of the Senior Design Clinic is when the comforts of well-defined textbook problems are abandoned; real engineering emerges. What you see in these pages is the manifestation of this uncertain process, which translates ideas into reality.

In short, what you see here is engineering!

We are grateful for the support of the sponsoring companies and organizations who have committed their funds, equipment, and time, to make this a truly great experience for our students. We are especially grateful for the support of the family, friends, and mentors on whom each of our seniors has relied, to reach this point in their incredible life journey.

Again, thank you and enjoy!

Dr. Don Weinkauf

Dean of the School of Engineering

School of Engineering

UNIVERSITY OF St.Thomas

LOWER BODY DIFFERENTIAL PRESSURE SYSTEM

From left to right: Elizabeth B. Johnson, Charles A. Augustine, Troy R. Louwagie, and Thomas J. Lee

MAYO CLINIC

TEAM 1

INDUSTRY REPRESENTATIVE
Tyler Van Buren

FACULTY ADVISOR
Scott Christenson

PROJECT SUMMARY

Current cardiology patients undergo a stress test, typically in the form of an exercise test, to evoke their symptoms. Any movement from the test can interfere with echocardiographic imaging used for diagnostics. Cardiologists have found that applying negative pressure on the lower body invokes a similar stress on the heart, by decreasing the rate at which the blood returns and the volume of blood entering the arteries. Positive pressure has the opposite effect. In addition to movement interfering with imaging, many patients cannot perform the exercise test, due to age or other physical inhibitors. The ability to use both positive and negative pressure, while eliminating patient movement and reaching a wider range of patients, could transform cardiovascular research.

DESIGN GOAL

The goal of this project is to deliver a Lower Body Differential Pressure System design and functional prototype. This system will be used with current cardiology technology to improve imaging.

DESIGN CONSTRAINTS

- Maintain internal pressures of +80 mmHg to -100mmHg and hold the pressure within 5% of the set value.
- Approach the desired pressure at a rate no greater than 5 mmHg/sec.
- Pressure shall be variable either continuously or in increments of 5 mmHg.
- Chamber shall accommodate all patient sizes from 4'-7' in height and 24''-55'' waist measurement.
- System shall have readouts of pressure, temperature, and humidity within 2% of the actual value.
- Noise level shall be kept at or below 75 dB.
- System shall be intuitive and require minimal training.

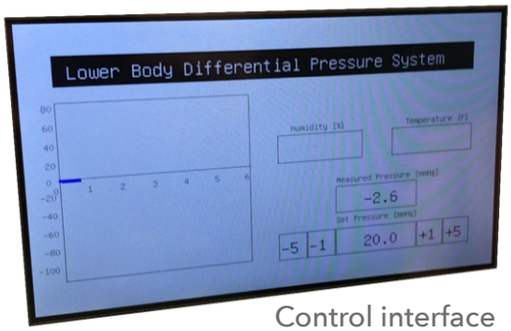

Control interface

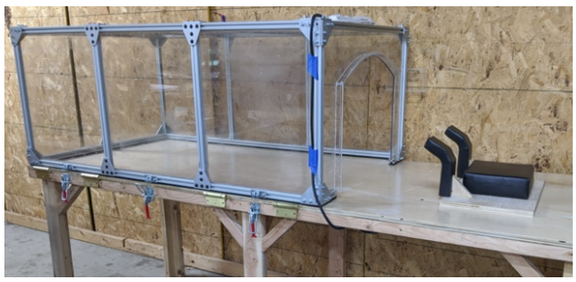

Full scale pressure chamber implementation

LEVER ACTUATED MITRAL VALVE DELIVERY SYSTEM

From left to right: MaryJane E. Pederson, Dominic W. Hafner, Nicholas K. Peter, and Isaac T. Fennewald

Abbott

TEAM 2

INDUSTRY REPRESENTATIVE
Preston Huddleston

FACULTY ADVISOR
Dr. Tom Secord

PROJECT SUMMARY

Mitral valve regurgitation occurs when a patient's mitral valve fails to close completely, causing blood to backflow in the heart. When this occurs, a replacement valve needs to be inserted in the patient's heart. This can be done through open heart surgery, or via Transcatheter Mitral Valve Replacement (TMVR). TMVR involves accessing the heart through a small hole in its apex and inserting the replacement valve using a tube. It is significantly less invasive than open heart surgery, much safer, and requires less time for recovery.

DESIGN GOAL

The goal of our project was to design a TMVR mechanism capable of loading, delivering, and readjusting a replacement mitral valve.

DESIGN CONSTRAINTS

- Mechanism must be able to provide sufficient force to load the valve
- Mechanism must be able to provide sufficient force to deliver the valve
- Must be smaller in length than current generation system
- Must be user friendly and ergonomic

Testing of the interior mechanisms fixture

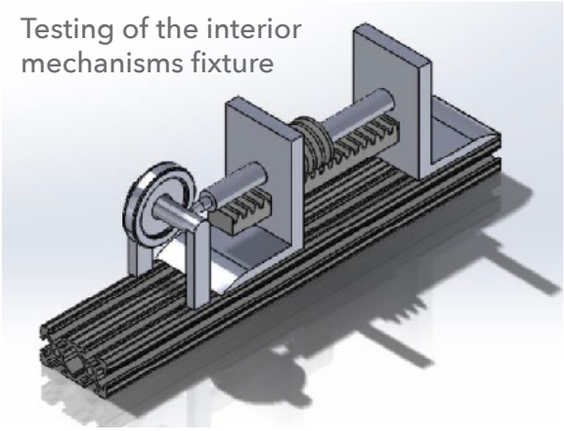

Actual mechanism

IMPLANT RECHARGING SYSTEM

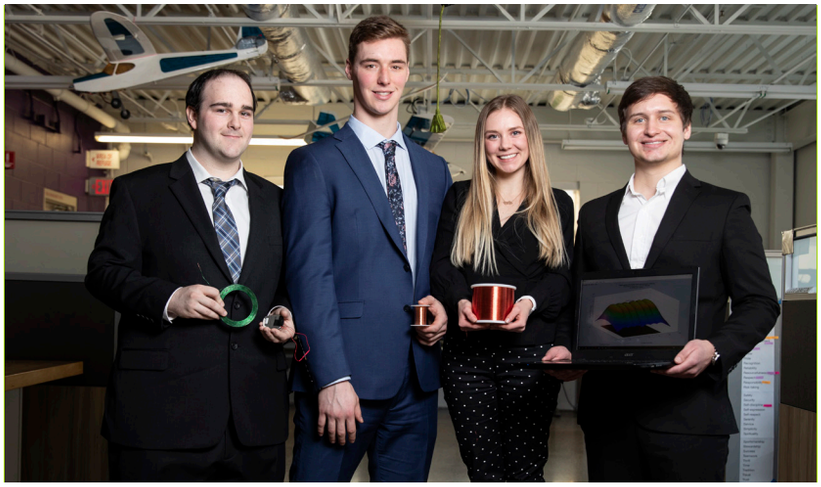

From left to right: Jacob L. Hammond, Derek J. Olmschenk, Sandra L. Hawley, and Jacob P. Komarek

Medtronic
Further, Together

TEAM 3

INDUSTRY REPRESENTATIVE
Dr. Robert J. Monson
Andrew T. Fried

FACULTY ADVISOR
Fr. Brian Zuelke

PROJECT SUMMARY

Medical implants are now using rechargeable batteries instead of the disposable type that required periodic, invasive surgery to keep the device operating. However, the current recharging process can be arduous for patients, forcing them to keep the device close to themselves and stationary for up to an hour a day. Our project aims to improve this recharging process by increasing the effective charging distance as well as the effective charging area and integrating the recharging process into the patient's normal sleep cycle. Our system achieves this through adaptive wireless power transfer, which automatically selects the most effective of three large coils implanted in a mattress using a variety of sensors and control algorithms designed using mathematical models and computer simulations.

DESIGN GOAL

To increase the charging distance from 3 cm to 10-20 cm, create an effective charging area of 3 ft 2,
and incorporate the recharging device into the user's everyday lifestyle, all to ease the burden of the recharging process.

DESIGN CONSTRAINTS

- Ability to charge an implantable device at a distance of 10 to 20 cm
- Ability to charge an implant located throughout any part of the torso
- Must offer the user greater flexibility and comfort
- The system must take the form of flexible mat or pad
- Must offer a user-friendly interface
- Operates based on feedback from the implantable device
- Must prevent overcharging
- Must limit tissue thermal exposure
- Must conform to applicable safety standards and regulations
- Must operate off 120 VAC @ 60 Hz
- Must have a cost of less than $2000

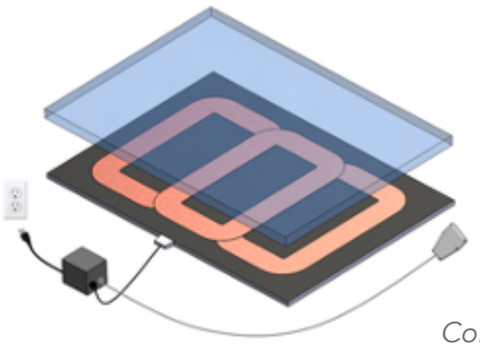

Computer Aided Design of Final Prototype

LAND-IT®
3M STATIONARY & OFFICE SUPPLIES DIVISION

From left to right: Charles L. Anderson, Andrew C. Elliott , Ebenezer K. Dadson, and Tony T. Pham

TEAM 4

INDUSTRY REPRESENTATIVE
Sithya Khieu
James Magargee
Andrew Merten

FACULTY ADVISOR
Dr. Chong Xu

PROJECT SUMMARY

3M is well known for the invention of Post-it notes, used by many to create physical reminders and capture ideas. With the evolution of technology people tend to set reminders on their devices through various methods including the digital Post-it app. Even though methods like these are more accessible than a physical note, they lack some of the benefits like the satisfaction of physically throwing away a task when completed. Project Land-it serves to bridge the gap between the digital and the physical note taking world by providing a printer which can receive and print your digital notes remotely with the quality of the Post-it brand.

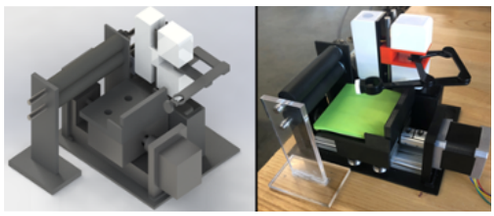

A digital and physical prototype of Land-it able to performs essential functions.

DESIGN GOAL

The goal of this design is to create a minimally viable prototype of a Post-it note printer and software which can allow the user to take a digitally created note and send it to the printer which physically creates and dispensed the note without the need for user intervention.

DESIGN CONSTRAINTS

In the most general sense, the sponsor expressed to the team the importance of designing a product which we would purchase on the market. This idea alone created numerous constraints for the team to deal with. Desk space is precious and the team tried to design a printer which can be scaled down to take up less desk space than a standard notebook. The team also realized how much of a hassle working with ink cartridges can be, so the printer was designed to run off of a standard pad of Post-it notes and a pen. Finally, in order to be something that the user can utilize remotely in their office space, while they are at home or other location, the printer must dispense notes automatically without the need for user intervention between print jobs.

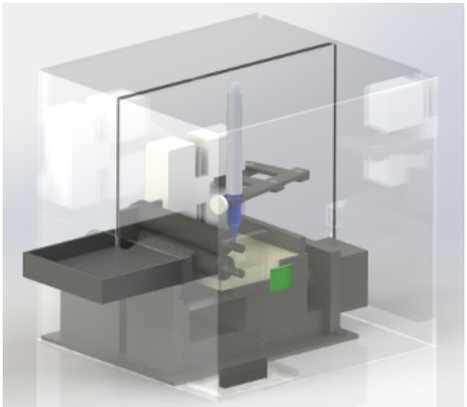

A rendering of the Land-it prototype with a potential enclosure and catch tray.

AUTONOMOUS MOBILE ROBOT CUSTOMIZATION

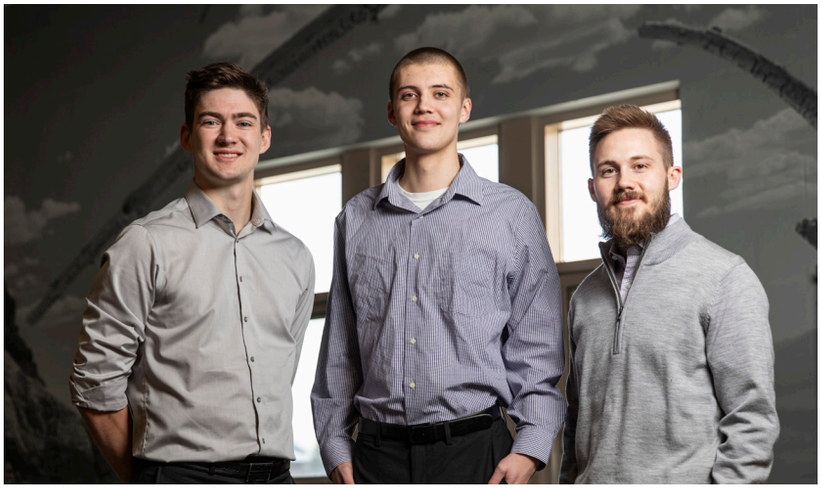

From left to right: Cole R. Montour, Ryan M. Jans, and Brandon K. Kerrick (not pictured Gage L. O'Brien)

SUPPLY CHAIN SERVICES

TEAM 5

INDUSTRY REPRESENTATIVE
Ted Strauss
Chip Emery

FACULTY ADVISOR
Dr. Hassan Salamy

PROJECT SUMMARY

This project involves the design, creation, and implementation of a new display structure prototype to be mounted atop a Fetch Robotics Frieght100 autonomous robot. The structure will replace an existing shelving unit and will be used at trade shows and events to showcase the scanners, mobile printers, and other warehouse inventory equipment sold by Supply Chain Services (SCS). Along with aesthetic presentation and display of SCS products, an external power source is stored within the design to power and charge the mounted scanners within the structure.

DESIGN GOAL

The goal of this project is to create a prototype robot attachment structure which can be used to display supply chain optimization products that include scanners, mobile printers, and wrist mounted computers.

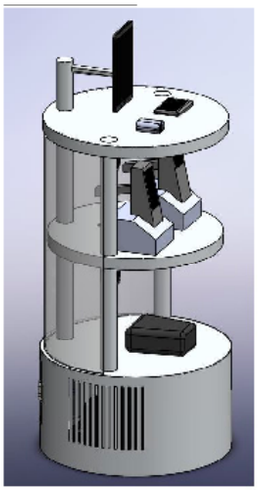

Finalized CAD Model of Attachment Shelf Design.

DESIGN CONSTRAINTS

- Support Weight of products without bending or sagging
- The structure dimensions shall be within 24 in wide by 48 in tall
- Structure shall weigh less than 100 lbs. Unloaded
- The structure shall charge scanner products loaded onto docking ports on structure
- Structure shall be removable with use of basic tools in under 30 minutes for shipping
- The structure shall interface with Freight100 to display robot and SCS information
- The structure shall be able to be packaged and shipped in existing shipping crate for Freight100 robot attachment
- The structure shall be stable and remain upright on top of robot without failure during collisions up to 1.5m/s (max unloaded speed of robot)
- The structure shall meet all applicable standards for vertical shelving/building

SENSOR SYSTEM TO PREVENT HEAT-RELATED TRAGEDIES IN PASSENGER VEHICLES

From left to right: John M. Cullinan, Alex A. Doerr, Savannah M. Johnson, and Michael S. Foss

TEAM 6

COMPANY CONFIDENTIAL

FACULTY ADVISOR
Dr. Bob Mahmoodi

DESIGN GOAL

The goal of this work is to prototype a sensor system to prevent the high number of child vehicular heatstroke deaths that occur within the United States due to natural causes of the environment.

"* Due to the confidential nature of this project, the sponsoring company has requested specifics be removed."

DESIGN CONSTRAINTS

- The prototype shall be able to sense all vulnerable individuals in the vehicle no matter the location.
- The prototype shall not drain the vehicle battery.
- The prototype shall be able to sense all demographics of people no matter their age, physical ability, or physical state such as sleeping.
- The prototype shall not obstruct the driver when installed.
- The prototype shall not falsely trigger.
- The prototype shall function up to a temperature of 150F.
- The prototype shall be compatible with at least one make/model and year of a vehicle.

SOUND ANALYSIS FOR HVAC EQUIPMENT

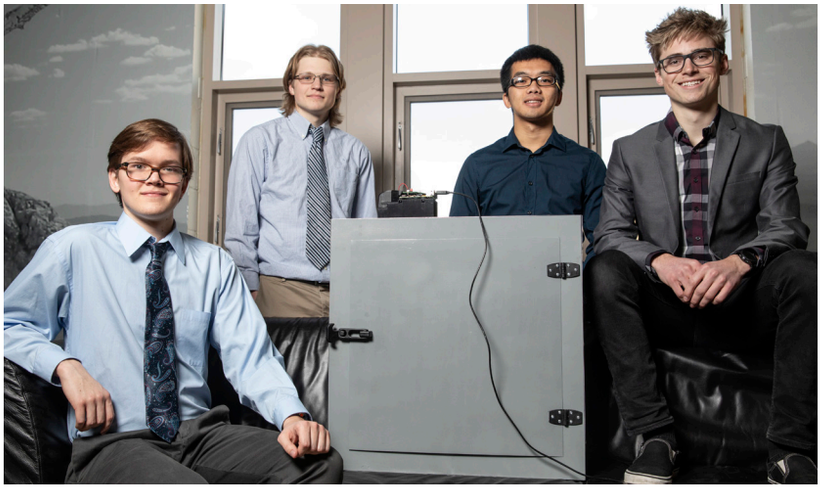

From left to right: Stephen W. Bourne, Peter A. Farley, Za Vang, and Noah T. Kopen

TEAM 7

INDUSTRY REPRESENTATIVE
Sean McCoy

FACULTY ADVISOR
Dr. Lucas Koerner

PROJECT SUMMARY

Heating, Ventilation and Air Conditioning (HVAC) systems are commonplace today, and in some industries are necessary for day-to-day operations. In these circumstances, downtime caused by a component failure can lead to both a time consuming and costly outcome. Trane, a manufacturer of HVAC equipment, wants to develop a product which acoustically monitors these systems, and predicts failures before they happen. To do this, Trane hopes to implement a device which uses microphones and computer software to detect abnormal operating sounds. Trane hopes to minimize the occurrence of HVAC failure through doing this.

DESIGN GOAL

Our goal is to develop a device which can detect sound abnormalities similar to those one may find in an HVAC system prior to failure. This proof-of-concept is to show Trane the abilities of current technology.

DESIGN CONSTRAINTS

Major design constraints for the device include the ability to filter out ambient noise such as human voice, thunder, vehicles, etc. The device must be able to work properly in an outdoor environment which entails rain, heat, cold, dust, etc. Software used by the device should run on a Linux based processor. Finally, the price of the device's hardware is an important criteria where 'good' is defined as less than $10, 'better' as less than $5, and 'best' as less than $2.50.

ONLINE MONITORING SYSTEM DISPLAY

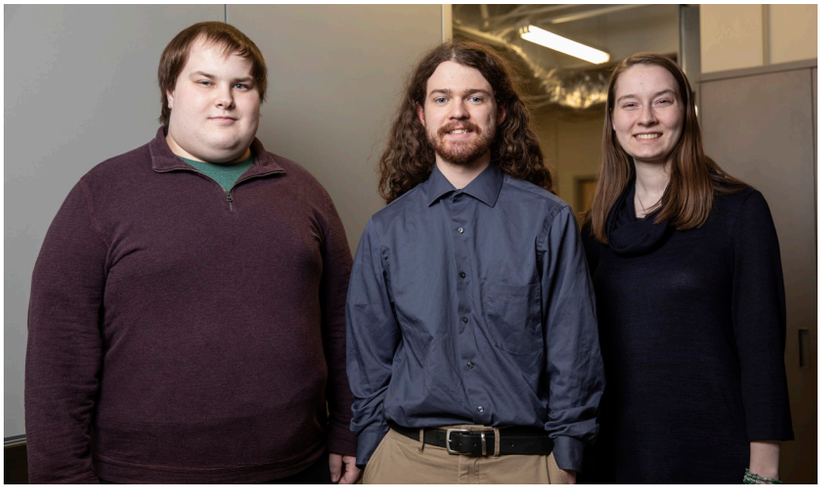

From left to right: Matthew T. Schewe, Anthony E. Buchanan, and Bernadette M. Dehnert

TEAM 8

INDUSTRY REPRESENTATIVE
Souren Chakirov
Anand Gopa Kumar

FACULTY ADVISOR
Dr. Kundan Nepal

PROJECT SUMMARY

One of the services HRST provides is maintaining Heat Recovery Steam Generators (HRSGs) within gas/steam power plants. HRSGs recover the heat from gas exhaust and create high energy steam. The temperature of this steam is controlled by spraying water into the flow, using a device called an attemperator. Because the water is cool compared to the steam, the pipes near the attemperator can experience thermal shock due to overspraying of cool water or valve failure. The senior design team has developed a method to monitor conditions around an attemperator, to aid in predicting failures, and to recommend preventative maintenance. In addition, the team also created a model that will be used to demonstrate the solution at trade shows.

DESIGN GOAL

The goal of this work was to develop a model of an attemperator to be used at trade shows, along with a user interface to display temperature and acoustic readings from sensors and alert the user of concerns in the attemperators operation. As part of this work, the team also evaluated and validated a system of sensors to measure temperature and acoustic noise at and near an attemperator.

DESIGN CONSTRAINTS

- Design shall include 5-10 temperature sensors with a final accuracy of ± 2 °F or less
- Design shall include 1-2 acoustic sensors
- In the model attemperator, water droplets from a nozzle shall cool an elbow downstream of the nozzle, to mimic overspray.
- Data from the sensors shall be displayed on a laptop, and the data needs to be transmitted to the laptop wirelessly
- The user needs to be alerted of potential problems in the system, via text message, email, or alerts on the laptop screen

HORIZON RPS DRILLING MACHINE

From left to right: Joshua D. Shade, Eden J. Spencer, Michael J. Morgan, and John D. Slack

HORIZON roofing

TEAM 9

INDUSTRY REPRESENTATIVE
Kurt Scepaniak

FACULTY ADVISOR
Dr. Michael Hennessey

PROJECT SUMMARY

On flat, commercial roofs, Reinforced Perimeter Strips (RPS) are installed to attach a rubber membrane to a concrete retaining wall. Holes must be drilled through the RPS into the concrete wall. This is a labor intensive job for workers due to the low height at which numerous holes must be drilled in the wall to secure the RPS with fasteners. Automating the drilling of these holes will increase the efficiency of installing RPS. The Drilling Machine will free up workers to focus on jobs which require more complex human labor.

DESIGN GOAL

The goal of this work is to design subsystem technologies for the machine that automate the drilling process and autonomously move the drill along the length of the wall. Other subsystem technologies designed include a system to clamp the machine to the wall, the controls system and sensors to monitor the operation of the machine.

DESIGN CONSTRAINTS

- The Machine shall drill four holes at a time
- The Machine shall move on its own in increments of four feet
- The Machine shall detect obstacles or edges in its path
- The Machine shall have adjustable arms to clamp to the wall
- The Machine shall not damage the roofing surface or wall
- The Machine shall function in humid and dusty environments with temperatures up to 1300F

Image of worker installing the Reinforced Perimeter Strip

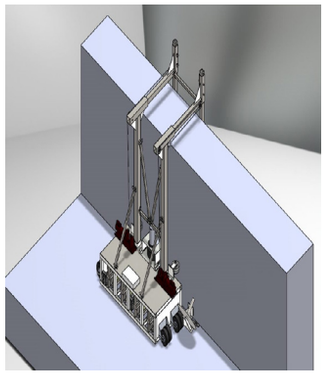

Solidworks model of the RPS Drilling Machine

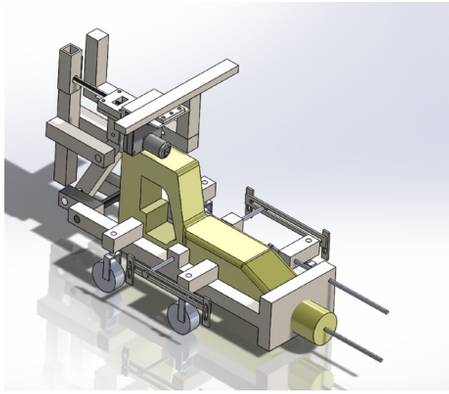

Solidworks model of the Drilling Mechanism

GREEN CLAMPING

From left to right: Drew J. Winkoski, Jared J. Klassen, Haley W. Larson, and Hunter A. Marosi

TEAM 10

INDUSTRY REPRESENTATIVE
Tony Schwartz

FACULTY ADVISOR
Tony Beck

PROJECT SUMMARY

Our team has been tasked with creating a more environmentally friendly solution than Wilson Tool's current press brake clamping method. This requires eliminating the hydraulic system and replacing it by producing the necessary force through an electromechanical or pneumatic option. This new design consists of modular segments, which reduces shipping costs and allows for individual control of various segments of the overall beam clamp. The modularity addition should have no negative impacts on overall system performance when compared to the current hydraulic solution. This means that the design must maintain approximately the same profile, not lose clamping force if power to the system is lost, and it should fully actuate in under one second.

DESIGN GOAL

- Design an eco-friendly solution to compete with or improve upon Wilson Tool's current line of hydraulic clamping systems.

DESIGN CONSTRAINTS

- Shall not use any hazardous fluids
- Shall maintain clamping force in the event of power loss
- Shall be able to be shipped in pieces to be assembled at destination
- Shall actuate in under one second

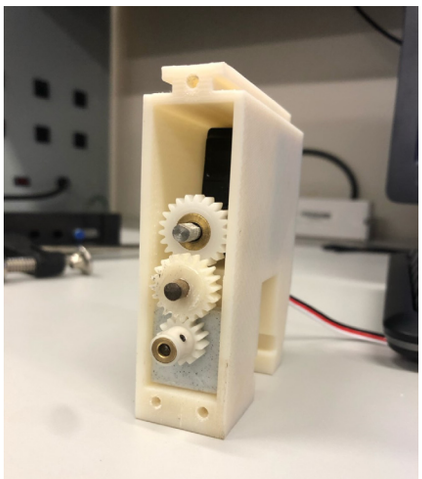

The internal system of the final working prototype for a single module.

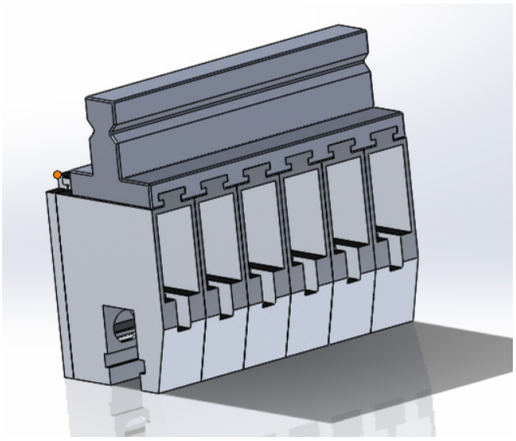

The press brake clamping beam with six modules mounted as they would be on a brake press.

TRASH CAN SEAM LOCK AUTOMATION

From left to right: Robert P. Gartlan, Kaung N. Han, Nicola J. Nodland, Jonah M. Schoenfelder, and Cullen A. Hilliker

TEAM 11

INDUSTRY REPRESENTATIVE
Bill Bellingham

FACULTY ADVISOR
Bob Bach

PROJECT SUMMARY

The team was tasked with fully automating 3 of the 7 process steps for a 100-year-old process to produce a 31-gallon Behrens Manufacturing steel trash can. The new design will eliminate all human involvement in order to decrease cost for Behrens as well as to increase safety for workers that are currently at risk for injury. The final output will be 50% more repeatable and reduce the total scrap from .8% to .4%. The proposed automated design will output a new can every 6 seconds, as opposed to the current cycle time of about 10 seconds. This system will double Behrens' capacity to produce cans as well as maximizing each shift on their floor.

DESIGN GOAL

The goal is to develop an automation process with zero human involvement that can produce a 31-gallon trash can every 6 seconds. This process must be kept within the given budget and must increase safety and precision to the current process.

DESIGN CONSTRAINTS

- Must take 6 seconds or less to produce one can
- The design must cost $750,000 or less to implement
- No human involvement during the entire process
- The design has to intake a roll of steel and output a seamed can with 44 corrugations

SOLIDWORKS Model of Behrens Trash Can

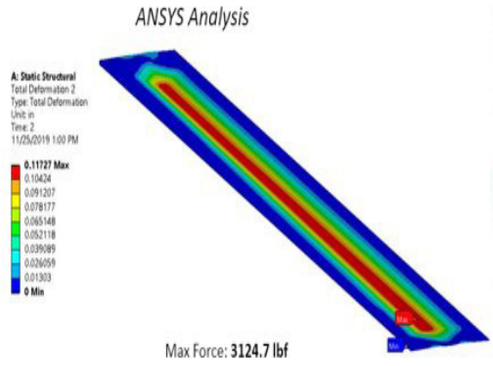

Time (s)	Reaction Force Normal to Punch (lbf)
0.2	12.558
0.3	72.727
0.4	237.78
0.55	735.63
0.775	1835.4
1	3124.7
1.07	911.99
1.14	124.99
1.21	8.6082
1.315	0.19933
1.4725	0.1535
1.7088	8.48E-02

ANSYS Simulation of Necessary Force for One Corrugation

GRINDING PROCESS SENSORIZATION FOR THE INDUSTRIAL INTERNET OF THINGS: CUT PERFORMANCE OF CUBITRON™ II ABRASIVE LINE

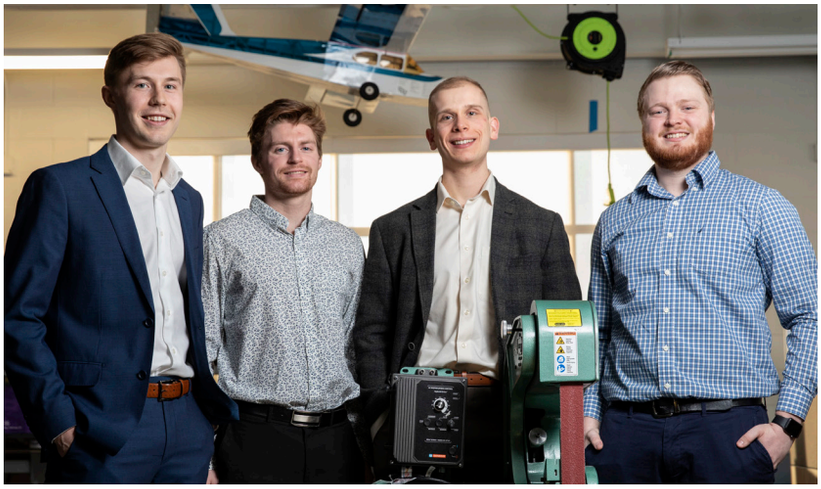

From left to right: Andrew C. Broman, Broydon M. Stufko, Matthew C. Ward, and Robert A. Schwankl

3M Science. Applied to Life.™

TEAM 12

INDUSTRY REPRESENTATIVE
Dave Hofeldt
John Ramthun

FACULTY ADVISOR
Dr. Cheol-Hong Min

PROJECT SUMMARY

To remain at the forefront of the abrasives industry, 3M seeks to leverage the Industrial Internet of Things (IIoT) in the development of their abrasive products. In partnership with the St. Thomas School of Engineering a testing apparatus that quantifies the grinding process was developed. The solution consists of a feed mechanism, a sensorization system, a Graphical User Interface (GUI), a grinder and a cart. An automated feed mechanism was implemented to ensure repeatable and controllable tests. Sensors incorporated in the apparatus were used to measure grinding variables, including real-time belt speed, material removal rate, and ultrasonic acoustic emissions indicative of belt wear. A Graphical User Interface (GUI) was developed to control the test parameters and display the results to the user.

DESIGN GOAL

The goal of the project was to create a testing apparatus that could perform repeatable grinding tests while collecting key cut performance measurements, including real-time belt speed, material removal rate, and acoustic emissions. The data collected from tests conducted on the apparatus needed to be accessible to the user for data analysis and external post-processing.

DESIGN CONSTRAINTS

- Be operable in a safe manner
- Be within budget of $3,000
- Be able to measure and collect data accurately on the grinding process
- Be able to export collected data to external sources
- Be able to maintain functionality in an industrial setting

A model of the grinding system used to characterize the performance of belts

PELVITAL EXPANDABLE PROBE

From left to right: Kevin P. O'Connor, Alia X. Benham, Madeleine F. Hommer, and Nathan W. Stenger

Pelvital

Restoring Pelvic Health

TEAM 13

INDUSTRY REPRESENTATIVES
Luke Dery
Dale Wahlstrom

FACULTY ADVISOR
Dr. Christopher Haas

PROJECT SUMMARY

Pelvital USA, Inc. has designed a female health device that aims to treat stress urinary incontinence by using vibrations at a specific frequency to strengthen the pelvic floor muscles. Stress urinary incontinence is a condition where urine is unintentionally lost. This condition affects 1 in 3 women, commonly due to childbirth, high impact sports, and old age. This team has been tasked to prototype the next generation probe that has the ability to expand and retract while outputting vibrations allowing all patients to use the device.

DESIGN GOAL

The goal of this project is to create a prototype for the next-generation device that has the ability to expand and retract while utilizing mechanotherapy via oscillations.

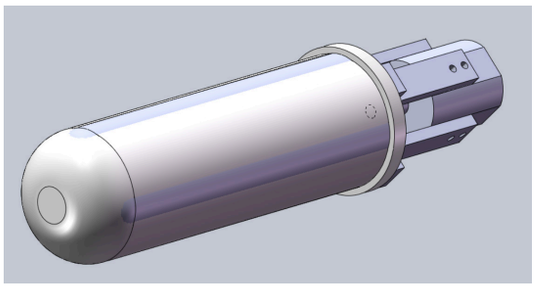

Computer-aided design of proposed next-generation Pelvital device.

DESIGN CONSTRAINTS

- The device shall start at 24mm
- The device shall expand up to 40mm
- The device shall be sufficiently rigid to provide the musculature with a pre-stress force
- The amount of expansion of the device shall be controlled
- The outer shell shall comprise of a medical grade polymer
- The device shall be manufacturable
- The device shall output oscillatory motion
- The device shall allow for space to house the oscillation mechanism
- The device shall not weigh too much

SUPER AWESOME SHIPWRECK CARGO EXCHANGE EXHIBIT DESIGN

From left to right: Kyra L. Boaz, Jillian P. Radosevich, Lucas S. Manke, and Elizabeth R. Kaiser

Minnesota Children's Museum

TEAM 14

INDUSTRY REPRESENTATIVES
Jess Turgeon
Mary Weiland
Patrick McKennan

FACULTY ADVISOR
Brian Plourde

PROJECT SUMMARY

The purpose of this project was to support the development and design of the interactive Cargo Exchange Component of the new Super Awesome Shipwreck Exhibit located in Minnesota Children's Museum (MCM). By working closely with Minnesota Children's Museum staff and following the Engineering Design Process, a virtual prototype and full-scale framework focused on functionality of the cargo exchange along with detailed build plans and test plans were produced to act as guidelines for the final installation and design of this portion of the exhibit.

DESIGN GOAL

The goal of this project was to develop a component of the Super Awesome Shipwreck Exhibit that allowed kids to move scuba diving props from one area of the exhibit to another and back again all in a fun, creative, and collaborative nature.

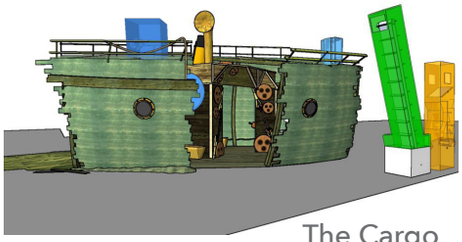

The Cargo Exchanger Area of the Super Awesome Shipwreck Exhibit

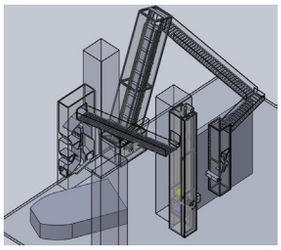

The Components of the Cargo Exchanger

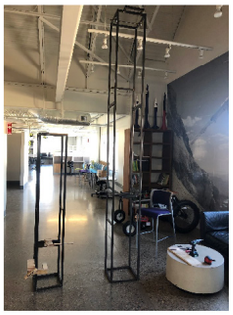

Examples of Full-scale Framework of Components

DESIGN CONSTRAINTS

- The design shall be able to support and move a 2 lb scuba gear prop back and forth from outside the Ship Hull to inside the Ship Hull.
- The design shall have an appropriate number of interactive components that stimulate collaboration and basic motor skills while not being too complicated.
- The design shall be able to accommodate groups of children playing along with individuals.
- The design should be focused on collaboration and creativity.
- The prototype design shall not be taller than 12 ft and shall connect to existing infrastructure.
- The prototype design shall meet the Americans with Disabilities Act best practice standards and the creativity standards of Minnesota Children's Museum.
- The design shall be industrial grade and easily disinfected.

OAK PARK OUTDOOR IMPROVEMENT RESPONSIBLE FARMING DESIGN

From left to right: Abhinav Shobhit, Maren J. Mosley, Kao Soua Yang, and Michael T. Hughes

PILLSBURY UNITED COMMUNITIES

TEAM 15

INDUSTRY REPRESENTATIVE
Ethan Neal
Michele Manske

FACULTY ADVISOR
Dr. Deb Besser

PROJECT SUMMARY

Pillsbury United Communities is a nonprofit organization that provides services to the Twin Cities community through community centers, social enterprises, and overall community engagement. The urban farm at Pillsbury United's Oak Park Community Center in North Minneapolis provides fresh, local produce to a community meals program and a grocery store. The Responsible Farming Design requires that the team determine creative ways to capture and store stormwater runoff for on-site agricultural use, collect and store compost waste from the site, and manage and maintain produce storage and farming productivity in the on-site pack shed.

Storage shed at the Oak Park site where farm produce will be washed and stored.

The area of the Oak Park farm to be served by the rainwater collection cistern.

DESIGN CONSTRAINTS

- Due to the nonprofit nature of Pillsbury United Communities, each of the following scope items shall be designed in a cost effective method and use grant-sourced funding if available.
- Rainwater harvesting: The distribution system shall incorporate the natural flow of the site topography and comply with recommendations from the Mississippi Watershed Management Organization.
- Compost: The compost area shall use untreated materials to prevent contamination of the produce farming area and include at least one recommendation of a method to quantify the composted food waste.
- Redesign of existing storage shed: The shed shall include a produce wash station and refrigerated storage cellar using the existing utility capabilities and structural footprint.

FREIGHT FARM RE-DESIGN

From left to right: Parker A. Schlueter, Chloe M. Weber, and Trevor J. Carlson

PILLSBURY UNITED COMMUNITIES

TEAM 16

INDUSTRY REPRESENTATIVE
Ethan Neal
Michele Manske

FACULTY ADVISOR
Dr. Travis Welt

PROJECT SUMMARY

Pillsbury United Communities creates ways for the North Minneapolis community to access fresh, local, and affordable produce. Their Freight Farm, a hydroponic farm in a converted freight container, is one way they provide local produce year-round. To reduce the operation cost and carbon footprint of the Freight Farm, an attachable frame has been designed that holds solar panels and creates a surface to collect rainwater for agricultural use. This frame is welded to the top of the freight container, onto which the solar panels are mounted. The solar panels sit adjacent to one another so that rainwater runs down into the attached gutter. Collected rainwater is filtered and housed in a cistern before being pumped into the Freight Farm.

DESIGN GOAL

Design a frame that attaches to the roof of the Freight Farm that holds solar panels to harvest solar power. Collect, route, store, and distribute rainwater to reuse inside the Freight Farm for agricultural use.

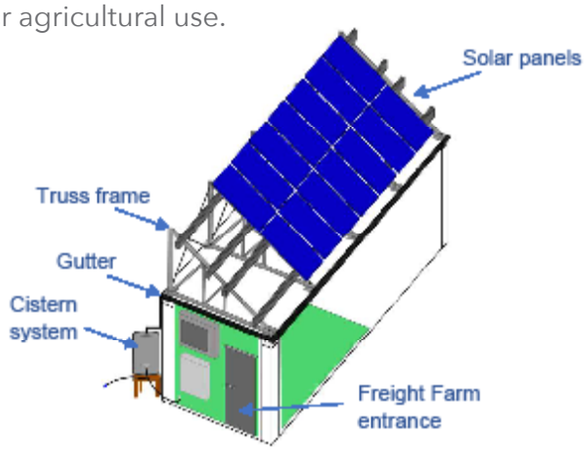

Freight Farm with attachable truss frame, solar panels, gutter, and cistern system.

DESIGN CONSTRAINTS

- Must design frame to work with existing metal type and sizes of the Freight Farm container
- Design frame to an angle that allows maximum amount of solar energy to be harvested in Minnesota climate
- Feed water into the Freight Farm that meets agricultural standards for crop growth
- System for rainwater collection must fit within limited space available on the roof

BASIC UTILITY VEHICLE DESIGN COMPETITION

From left to right: Collin J. Goldbach, Mark M. Cahow, Abigail D. Jagiela, and Ibrahim N. Sareva

School of Engineering | UNIVERSITY OF St.Thomas

TEAM 17

FACULTY ADVISOR
Andy Tubesing

PROJECT SUMMARY

Each year, collegiate engineering teams travel to Batavia, Ohio to pit their custom-designed Basic Utility Vehicles (BUVs) against one another in a 7-hour, heavy terrain race to move as much water around a 2-mile course as possible. The BUVs are designed with the intent of creating an affordable, easy to maintain, vehicle for remote villages in developing countries with limited access to fresh water. This year's team presents the third iteration of the St. Thomas BUV, featuring an improved power transfer system aimed at increasing top speed, and a variety of ergonomic upgrades. These upgrades work to improve turning radius, engine control, and general safety of the vehicle.

DESIGN GOAL

The goal of the BUV is to develop a low cost, multifunction vehicle that can be utilized in developing worlds, with little infrastructure, to obtain and transfer water and necessary cargo along with performing other daily tasks.

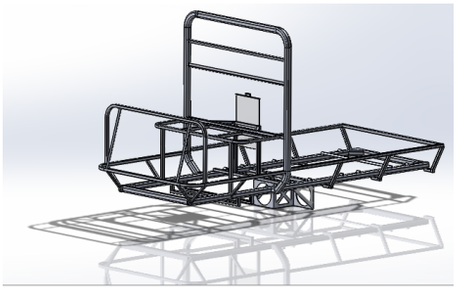

Updated CAD model of the vehicle frame with a new guard system for the CVT clutches.

Vehicle as it stands without the 55-gallon steel drums.

DESIGN CONSTRAINTS

- Vehicle needs to have a maximum speed of 20 MPH
- Vehicle bed needs to be able to hold a maximum of 165 gallons of water (about 1400 pounds)
- Vehicle must have a water pump that can fill 55-gallon drums of water within 15 feet of a body of water
- Vehicle needs to have a parking brake strong enough to overcome the engines power
- Vehicle must have a 20-foot looped-end tow strap for towing the vehicle if necessary
- Vehicle must have agricultural tread tires
- Vehicle cargo bed must be able to hold at least two 55-gallon steel drums

GLOBAL CHANGEMAKING

OFF-GRID MILK COOLING

From left to right: Valerie K. Brown, Megan E. Ray, Phillip M. Kuplic, and Tana I. Larson

PARTNERS IN FOOD SOLUTIONS

Connecting Expertise with Opportunity

TEAM 18

INDUSTRY REPRESENTATIVES

Simon Hailu
Faith Ngila
Maglalene Mbaga
Erika Thiem

FACULTY ADVISOR

Dr. Greg Mowry

PROJECT SUMMARY

Rut & Hirut Milk Cows Breeding Dairy Production and Processing PLC is a dairy company in Ethiopia that is responsible for processing milk from local dairy farmers. Many farmers who live in rural areas have little access to grid electricity and therefore have no way of cooling their milk. This leads to bacteria growth in the milk. When the milk has high levels of bacteria, it cannot be sold to Rut and Hirut. This causes a loss of profit for both the farmers and the dairy company. It is necessary to have a product that will cool the milk to a temperature in which bacteria will not grow while also being off grid.

DESIGN GOAL

The goal of this project is to create an off-grid cooling device that will take warm milk and cool it to avoid the growth of bacteria in the milk. This cooling process needs to be efficient enough to be off grid and must also be low cost.

DESIGN CONSTRAINTS

- The manufacturing cost shall not exceed $450 per farmer
- The product shall be constructed using materials that can be sourced from or near Africa
- The product shall store 10 L of milk per farmer per day
- The product shall cool milk to around 4°C
- The product shall be able to cool 10 L of milk from 38°C to 4°C in 1 hour
- The product shall be easy to clean and transport

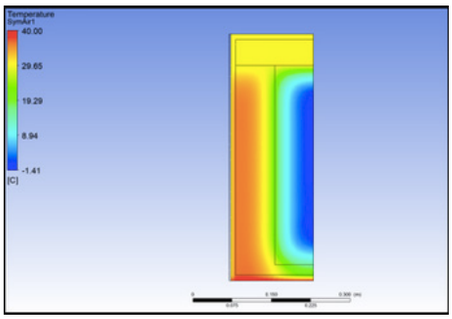

ANSYS Simulation of cooling.

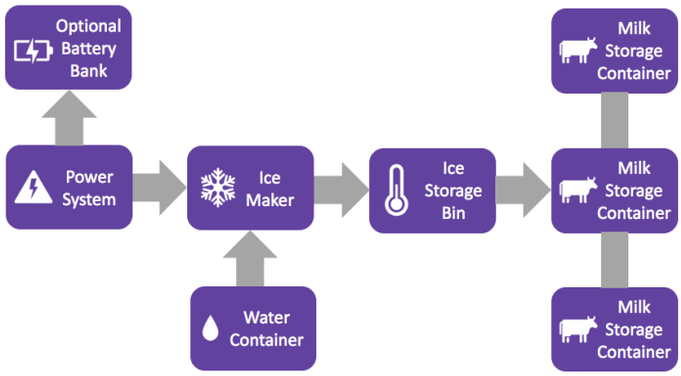

Full process milk cooling container.

GLOBAL CHANGEMAKING

UNIVERSAL STATIC PRESSURE SENSOR

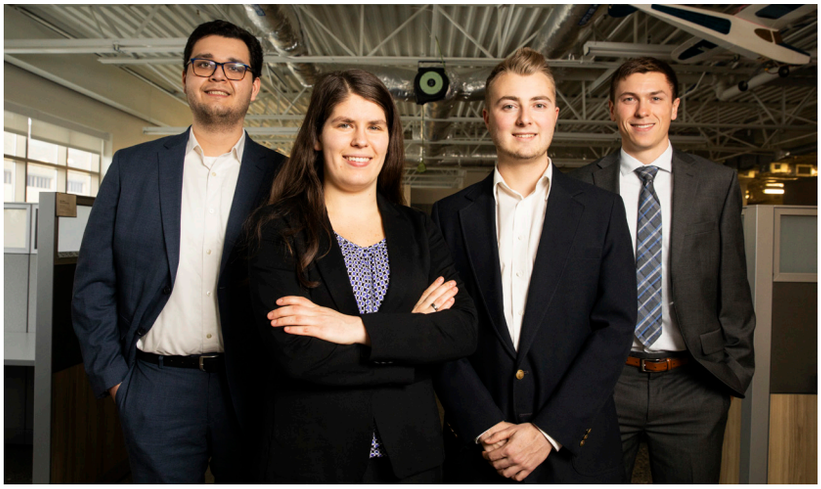

From left to right: Israel Resendiz, Olivia R. Elvidge, Austin J. Blesi, and Karl R. Wachter

Collins Aerospace

TEAM 19

INDUSTRY REPRESENTATIVE
Marc Childress
Aaron Cusher

FACULTY ADVISOR
Dr. Dave Forliti

PROJECT SUMMARY

Collins Aerospace is an industry leading company that manufactures Air Data Sensors at their Burnsville, Minnesota location. Most aerospace companies, including Collins, use a computer simulation method called Computational Fluid Dynamics (CFD) to simulate flight conditions on their products. This is especially useful when developing new products during the research and development phases; however, these simulations are still subject to error and the only way to validate results is by performing experiments during test lights. For this reason, the development of a removable static pressure sensor is needed to validate CFD results during flight test campaigns.

DESIGN GOAL

Develop a housing that will hold the sensor that will be used to verify the static pressure distribution on complex aircrafts geometries during flight test campaigns.

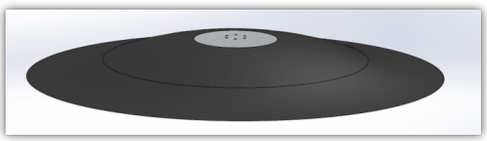

CAD image of device

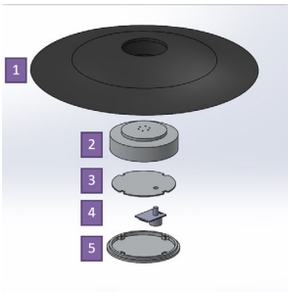

Exploded view of device
1. Body
2. Housing
3. Manifold Wall
4. Mock Transducer
5. Housing Cap

DESIGN CONSTRAINTS

- The pressure sensor design must: Mount to a range of curvatures that are characteristics of common aircraft surfaces.
- Be aerodynamically shaped
- Mount to the aircraft without altering the mounting surface
- Measure mean static pressure with an accuracy of ±5%.
- Function in conditions up to 40,000 ft altitude, Mach 0.9, and - 40˚F temperatures.
- Have its own internal power source
- Protect its electrical components from environmental conditions (IP-65 Standard).

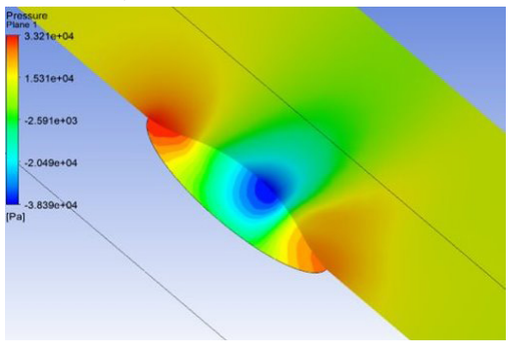

CFD Pressure analysis of device at Mach 0.9

LIQUID SENSOR PRESSURE TESTING PRESSURE VESSEL

From left to right: Stephen R. Wagner, Tyler J. Thorson, James R. Prell, and Viet P. Pham,

EMERSON

TEAM 20

INDUSTRY REPRESENTATIVE
Nathan Johnson

FACULTY ADVISOR
Paul Chevalier

PROJECT SUMMARY

This project required the design of a new liquid water pressure vessel for Emerson's Rosemount division. The pressure vessel is a unique piece of test equipment that will be used exclusively by Emerson. This specific vessel design is intended for relatively high pressures and temperatures. Emerson will use the vessel as a test apparatus for various sensors, mainly to validate their operational pressure and temperature ranges. This vessel is intended to improve the quality as well as validate the operating conditions of their marketed sensors.

DESIGN GOAL

The goal of this project is to design a liquid sensor pressure vessel for pressures as high as 400 psi, and temperatures as high as 200 C.

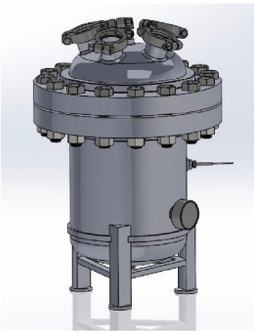

Pressure vessel design

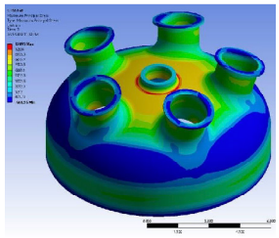

Stress analysis of lid under pressure

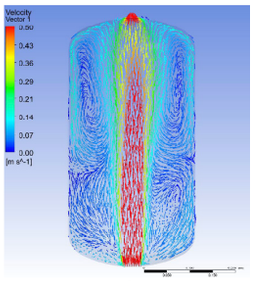

Vector diagram of fluid velocity in vessel

DESIGN CONSTRAINTS

- Design must be guided by the ASME BPVC Section 8 Div. 1 Code. (American Society of Mechanical Engineers Boiler and Pressure Vessel Code, for Design of Pressure Vessels).
- Must have a working pressure of at least 400 psi and 200 degrees Celsius.
- Must have at least 4 sensor ports on the lid.
- Must have at least 1 interchangeable lid.
- Vessel must fit inside a 15" x 15" x 24" box to ensure it complies with the current testing table.
- Outside of the vessel cannot exceed 40 degrees Celsius.
- Vessel flow must not contain heat gradients at steady state.
- Vessel must include ports for a pressure gauge and a thermocouple.

CONSTANT AIR VELOCITY TEST DUCT FOR MEASURING PRESSURE DROP ACROSS VARIOUS OFFICES

From left to right: Logan C. Scholla, Nathan J. Schlosser, Connor T. Sherod, and Dillon R. Tradewell

3M Science. Applied to Life.™

TEAM 21

INDUSTRY REPRESENTATIVE
JB Stender

FACULTY ADVISOR
Dr. Tom Shepard

PROJECT SUMMARY

We designed an 8"x8" test duct (similar to an HVAC duct) through which a constant volumetric flow rate of air, or inlet velocity, can be pulled. This project entailed designing a controller with a feedback loop that can adjust the fan/blower velocity in real-time. The duct can accommodate various "cartridges" that each contain a different orifice for the air to flow through and allow for the measurement of pressure drop across that orifice. The need for this custom test duct comes from a lack of readily-available test ducts that are suitable for testing products that are currently being developed.

DESIGN GOAL

To create a new test method.

DESIGN CONSTRAINTS

- Ability to retain cartridge without pressure losses around the edges or through gaps.
- Design for ease of cartridge changes and data acquisition.
- Must be able to set and maintain constant inlet velocity.
- Must be able to drain liquid that condenses on walls of duct.
- Resists corrosion in a moderate heat & high moisture environment.
- Cannot support combustion if exposed to an ignition source.

FIRE PROTECTION
MODEL OF TEST APPARATUS DESIGN

From left to right: Diana Theresa C. Bulaong, Paige E. Huschka, Helen M. Roach, Rajeep Lamichhane, and Hannah G. French

3M Science. Applied to Life.™

TEAM 22

INDUSTRY REPRESENTATIVES
Mark Lund
Rodrigo Marmol
Paul Fannin
Richard Haffner

FACULTY ADVISOR
Todd Jones

PROJECT SUMMARY

The project assigned to the team was to create a test apparatus that would allow 3M to test and innovate in-house. The apparatus needed would run a cyclic test to mimic movement caused by various things such as pipe disturbance during the construction phase of building, building swaying in high winds, or live loads within the building, to pipe elongation and expansion during the life of a building. The results of the test would then allow 3M to assign movement ratings to their products that guarantees the integrity of their firestop during any movement. The Senior Design Team was tasked with designing the mechanical components of this test as well as a control system that would move the test according to the ASTM 3037 movement standard.

DESIGN GOAL

The goal of this project was to design a test apparatus that will test 3M's firestop material according to test standards for Cyclic Testing in order to bring testing in-house.
The main constraints on this project are dealing with the logistics of moving the test apparatus, both from St Thomas and around the 3M testing facility.

DESIGN CONSTRAINTS

- The apparatus must be able to be lifted by a forklift
- Apparatus and pieces must be light enough to be handle by one or two people
- The apparatus shall be able to test the firestop in two axes, not simultaneously
- The apparatus shall include a user-friendly interface
- The control system shall be able to be paused and continued or completely terminated by a push of a button
- The control system shall output the data to an Excel spread sheet

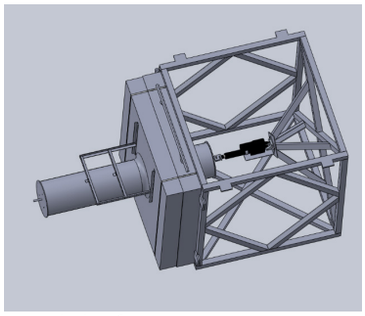

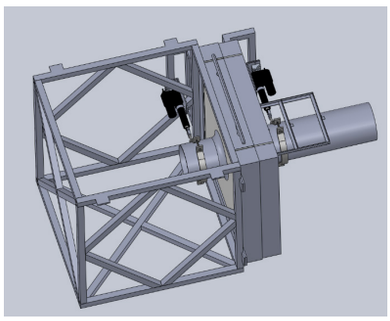

Model of test.

DOUBLE HUNG SASH QUALITY IMPROVEMENT

From left to right: Nathan J. Pierce, Jake G. Rybakowicz, Alyssa V. Wagner, and Matthew S. Delk

Renewal by Andersen
WINDOW REPLACEMENT an Andersen Company

TEAM 23

INDUSTRY REPRESENTATIVE
Matthew Carlson

FACULTY ADVISOR
Steve Albers

PROJECT SUMMARY

The DG sash line is a new production line from Andersen Windows. Over the last year, production has been increasing steadily and Andersen now aims to produce over 1000 units a day. However, this progress has been impeded by aluminum chips that are getting compacted into a part known as an interlock during a machining process. These aluminum chips can cause damage to the final product and to tools on the assembly line. Our new hand tool, tool station, and process guidelines simplify the cleaning process. Using our new hand tool, 95% of the aluminum chips lodged into an interlock are removed on average and it is over 20 seconds faster than the current tools Andersen is using. The tool station keeps the fabrication area organized and contains the chips in one area, preventing them from getting tracked outside of the fabrication area.

DESIGN GOAL

To prevent aluminum chips from leaving the fabrication area by clearing out the chips from the window interlocks

DESIGN CONSTRAINTS

- Shall not use water, coolant, or lubricant to remove chips
- Shall not significantly alter the current machining process
- Shall use existing dust collector to dispose of chips
- Shall be completely enclosed to prevent chips from escaping
- Shall not use a dust vac
- Shall be able to clean all interlock lengths

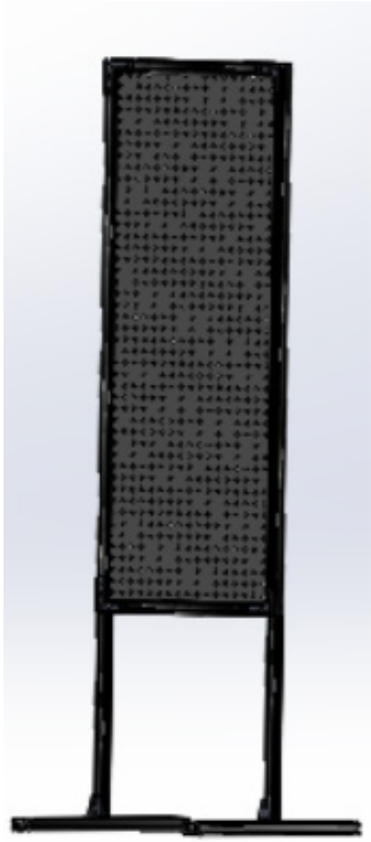

Newly Designed Tool Station

NEW SLUG EJECTOR CONCEPT

From left to right: Osama A. Sonbol, Joseph M. Sargent, Justin J. Kuznar, and Aaron T. Harpster

TEAM 24

INDUSTRY REPRESENTATIVES
John Morehead
Brian Lee

FACULTY ADVISOR
Dr. Jeong Ho You

PROJECT SUMMARY

In punching operations, where large presses are used to put holes of various sizes in sheet metal, the scrap material, known as a slug, must be removed to prevent damaging the products or tooling. This is done using a slug ejector. The current design sold by Wilson Tool uses a spring to provide the required force. Because of the spring, a specialty tool must be used to hold the ejector back to prevent damage when sharpening the punch. The purpose of this project is to redesign the working components of a slug ejector to reduce the required work for maintenance and sharpening. By eliminating the use of the specialty tool and maintaining current effectiveness, time is saved when sharpening.

DESIGN GOAL

Reduce the time and effort required to prepare the punches for sharpening by redesigning the slug ejector while maintaining current slug removal effectiveness.

DESIGN CONSTRAINTS

- Use parts Wilson Tool can make or purchase
- Maintain slug removal efficiency
- Punches must fit inside punch press
- Punches must be made of M2 high speed steel
- Quill diameter shall remain the same for 3/8in and 5/8in punches
- The prototype shall expose the quill a maximum of 0.040 inches beyond punch face

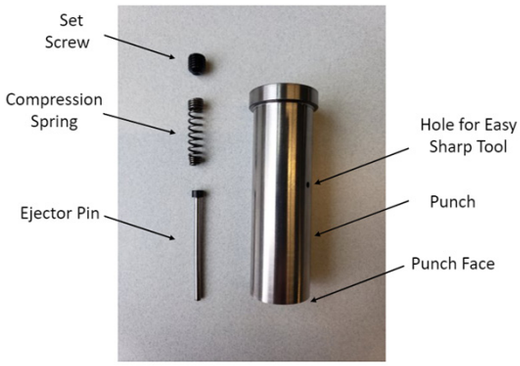

Overview of components in the original spring-ejected punch design that is 2 1/2 inches long

One size of an EZ Sharp tool.

FILL TUBE CRIMPER REDESIGN

From left to right: Joshua C. Prater, Rebecca L. Steffes, John J. Houle, and Derek M. Daly

EMERSON

TEAM 25

INDUSTRY REPRESENTATIVES
Lauren Wickham Kolstad
Ben Louwagie

FACULTY ADVISOR
Dr. Katherine Acton

PROJECT SUMMARY

Working with Emerson, the team was tasked with the goal of redesigning a pneumatic tool to be used to manufacture pressure sensors. These sensors are customizable and vary in applications from oil and gas tanks to the food industry, which translates to the crimper being used on different sized sensors. After assembling the sensor, it is filled via a fill tube (two different metals) with fluid and is crimped with the pneumatic crimper. This crimper needs to have enough force to fully crimp the metal tubes while not over crimping or breaking the tubes. Overall, this was a tool redesign focused on optimizing the dimensions and actuation style.

DESIGN GOAL

To redesign the company's crimper used on fill tubes to be as small as possible while maintaining crimping ability.

DESIGN CONSTRAINTS

- New design should be smaller than the current in all dimensions
- Can crimp both types of fill tubes (different wall thicknesses for the two different materials)
- Easily manufactured and ergonomic
- Uses similar pressure settings and pressure converters as are already in use
- Alignment between the tool and fill tube shall use the same method as are already in use

Old jaw design crimping a mock pressure sensor

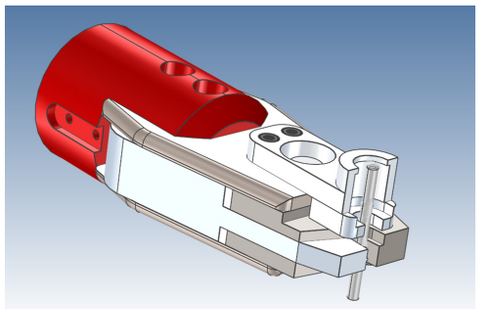

New jaw design implementing a triple scissor design

ASHOKA U IS THE LEADING DESIGNATION FOR SOCIAL INNOVATION IN HIGHER EDUCATION

The University of St. Thomas is part of the Changemaker Campus Network, having received the ASHOKA U designation. Changemaking is embedded in our campus-wide culture, programs and operations.

Launched in 2008, Ashoka U offers the Changemaker Campus Designation to leading institutions in social innovation and changemaking in higher education. Changemaker Campuses empower students and all university stakeholders to be change makers, firmly embed changemaking into their culture and operations, and work to address both local and global challenges. They are re-envisioning the role of higher education and the university in society as major drivers of social impact.

Social innovation is the process of developing and deploying effective solutions to challenging and often systemic social and environmental issues in support of social progress.

As a social innovation organization, Ashoka U is not your traditional accrediting body with traditional goals. And, Ashoka U's Changemaker Campus is not your average designation.

Changemaker Campus is a community of leaders and institutions who work collectively to make social innovation and changemaking the new norm in higher education and beyond. The Changemaker Campus program seeks to select diverse institutions who:

- Represent higher education globally;
- Model campus-wide excellence in social innovation and changemaking; and
- Are committed to contributing to the field of social innovation and changemaking education and an Everyone a Changemaker™ world

These institutions collaborate with each other and Ashoka to advance social innovation and changemaking across higher education so that one day together we will be graduating millions of changemakers.

Rather than being an "end" in itself, the Changemaker Campus designation serves a strategic role in enabling the campuses to work collaboratively towards systems-level change in higher education through creating and spreading ideas, models, and practices that further the spread of social innovation and changemaking education globally.

Look for these logos throughout this guide.

LOCAL CHANGEMAKING

GLOBAL CHANGEMAKING

SUMMER/FALL SENIOR DESIGN TEAMS

THE SENIOR DESIGN SHOW FOR THESE TEAMS TOOK PLACE IN DECEMBER 2019.

HIGH-EFFICIENCY AUTOMATED THERMAL (H.E.A.T.) WELDING ROBOT

From left to right: Leo D. Flentje, Adam V. Zopf, John V. Wallace, Alfred O. Danquah, and Michael D. Hart

HORIZON roofing

TEAM A

INDUSTRY REPRESENTATIVE
Kurt Scepaniak

FACULTY ADVISOR
Dr. Christopher Haas

PROJECT SUMMARY

Leaks in commercial roofs cause damage to the inside of buildings. These leaks make up 26% of all commercial roofing costs and repairs. Human error during the roof installation process is often the source of roof leaks. This project aims to reduce human error during roof installs. We accomplish this by increasing automation of the roofing process. Presently, large flat roofs are installed by welding large sheets together by hand. Our solution automates the welding process by using a variety of sensors, heat models, and control algorithms to control a formerly manually operated plastic roof welding machine. The automation of the welding process creates more consistent welds, reducing the chance of roof leaks and building damage.

DESIGN GOAL

To reduce human error during the roof welding process in order to create consistent welds under various weather conditions.

DESIGN CONSTRAINTS

- Ability to operate and collect data on a 240 Volt, single phase system.
- Ability to collect employee log in, date, and time
- Ability to collect all sensor data
- All sensor data must be stored in external memory for later data analysis
- All thermodynamic ANSYS models must be verified with independent lab results
- Ability to track operator location and movements via GPS
- Ability to track obstacles in front of it
- Ability to shut down if obstacle in its path does not move
- Have an emergency shut down procedure

SUPER AIR KNIFE EXIT FLOW CHARACTERIZATION

From left to right: Rodney A. Lewis, Sarah A. Brearey, Victoria D. Farias, and Andy W. Whately

3M Science. Applied to Life.™

TEAM B

INDUSTRY REPRESENTATIVE
Ellison Kawakami
Jason Petaja

FACULTY ADVISOR
Dr. Thomas G. Shepard

PROJECT SUMMARY

The automated characterization system is intended to be used to evaluate the uniformity of the airflow up to six inches from the exit slot of the Super Air Knife. The characterization method provides the detection and placement of blockages within the knife and the transition from laminar to turbulent airflow. The system is comprised of a force sensor, lever arm attachment, traversing position structure for data acquisition and a software program for data processing & visualization.

DESIGN GOAL

To endure even flow for a given application, 3M requires the development of a test fixture to determine the performance of the Super Air Knife. The final test fixture serves a user-friendly method to evaluate the air flow and check for blockages within the air knife.

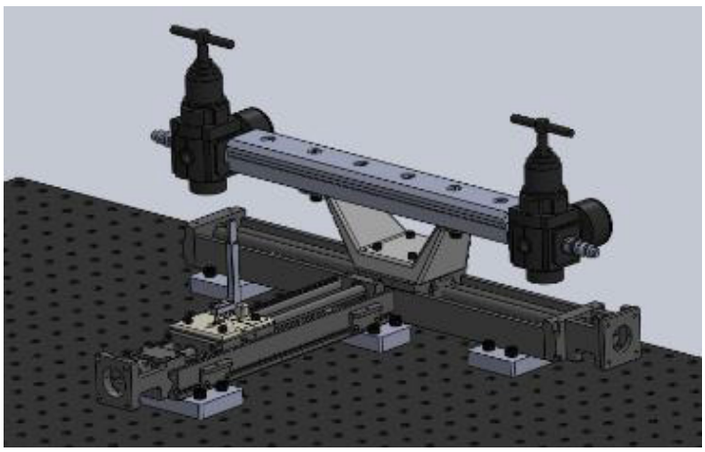

Computer Aided Design assembly of final test fixture

DESIGN CONSTRAINTS

- Must test between 0.01 inch and 6 inches from air knife slot
- Must be capable of detecting blockages at slot heights of 0.002-0.008 inch and manifold pressures between 15 psi and the maximum achievable in-house pressure
- Test must be completed in under 5 minutes
- Program must run on LabVIEW
- Software must be usable by a technician
- Software must create a 2D plot of the air flow to qualitatively determine the uniformity of the airflow
- Team must quantitatively characterize the air flow and determine the location of the transition region (laminar to turbulent) for each slot height and manifold pressure

EXCESS TREAT DRIP MITIGATION

From left to right: Abdullah K. Almuhathil, Hussain R. Yousif, Zack D. Johnson, and John A. Thurner

TEAM C

INDUSTRY REPRESENTATIVE
Dan Jackson

FACULTY ADVISOR
Bob Bach

PROJECT SUMMARY

Andersen Corporation was experiencing over 30% scrap on their wood painting lines. This was due to excess wood treatment building up on the bottom of their wooden parts. This caused the paint to chip. Scrap costs for Andersen were over $3.5 million per year. Andersen had tried multiple times to fix this problem and was only successful with an expensive and large chemical treatment. This solution was not able to be implemented on other paint lines. Team C created a mechanical solution using an air blower to direct a sheet of air to remove the excess treatment from the bottom of the wooden parts.

DESIGN GOAL

Andersen wanted a simple mechanical design that requires little to no maintenance. This design must fit on their current line configuration. Due to electrical safety standards pictures were not allowed in the paint line area.

DESIGN CONSTRAINTS

- Electrical safety standards Class 1 Div 1
- Line speed (12 parts per minute)
- Visual inspection criteria for scrap (excess treatment removed and no contamination)
- Space limitations (mounted at the end of the drying oven)
- Must work for all parts (6, 4, 2-part shields)
- Minimal maintenance
- No compressed air

SANITARY WELDING VERTICAL INTEGRATION

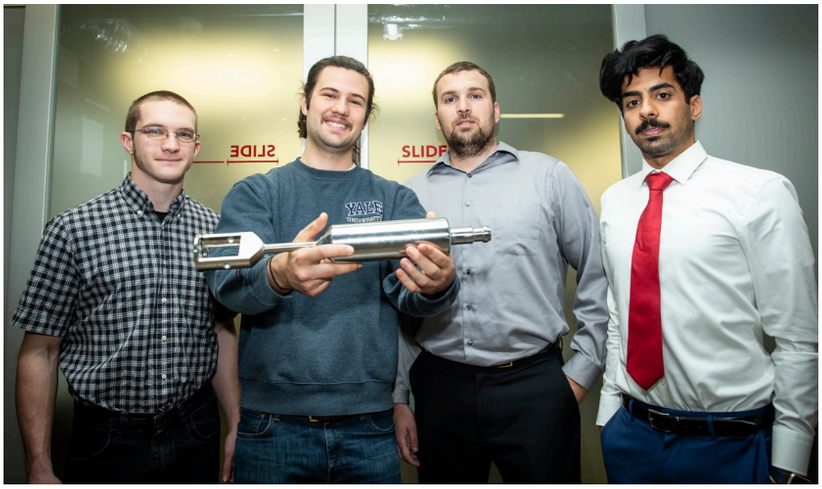

From left to right: Sultan A. Aljuhani, Brad J. Gartner, Nicholas S. Larson, and Daniel R. Lenertz

GRACO

TEAM D

INDUSTRY REPRESENTATIVE
Ben Paar
Mark Emery
Kevin Hautala

FACULTY ADVISOR
Tony Beck

PROJECT SUMMARY

The team was tasked with researching the processes involved with sanitary stainless steel welding, and determining the feasibility of vertically integrating them into Graco's Minneapolis facility. We've made Graco a detailed plan for this integration, including step by step instructions for welding and polishing stainless steel in a sanitary fashion. To attain sanitary quality, welds must be ground and polished to a surface roughness of 32 microns or less, known as a #4 finish.

DESIGN GOAL

To help us estimate the time it would take to satisfactorily weld and polish round parts, we've designed and prototyped a welding fixture to hold and turn one of Graco's parts while it's being welded and ground to a #4 finish.

DESIGN CONSTRAINTS

- The fixture must enable easy clamping and unloading.
- The table should be safe (round all corners), easy to clean, adjustable and light enough to relocate.
- The fixture must be able to be operated by one person.
- The fixture must be able to handle the heat that comes from Tungsten Inert Gas (TIG) welding.
- Fixture must cost less than $3000 to build

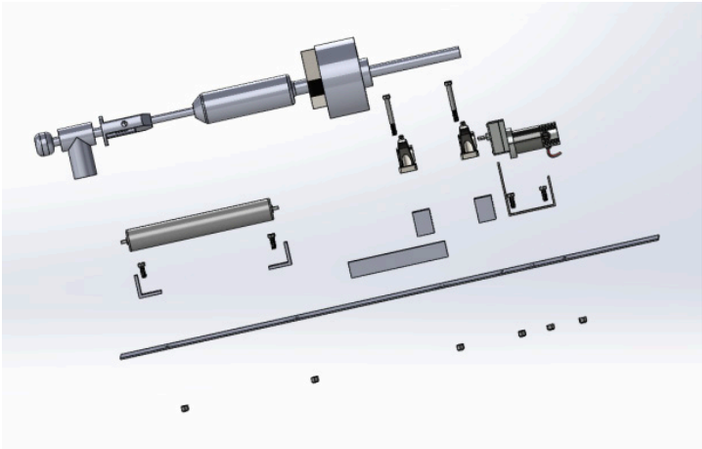

TACTILE DIAGRAM SCANNER

From left to right: Henry A. Martinson, Charlie A. Lundquist, and Meheret B. Tadesse

Minnesota State Services for the Blind in partnership with the Siemer Foundation

TEAM E

INDUSTRY REPRESENTATIVE
Jay Maruska
Dennis Siemer

FACULTY ADVISOR
Dr. Keith Berrier

PROJECT SUMMARY

One of the many services that Minnesota State Services for the Blind provides is the transcription of books and documents into Braille. When a book is transcribed into Braille, tactile diagrams are created to convey non-textual information through touch. Many of these tactile diagrams are hand-made, and time consuming to produce. While Minnesota State Services for the Blind has a method for creating copies of their tactile diagrams, it is time intensive and requires the use of the original diagram. The tactile diagram scanner developed by this senior design team allows for the creation of digital versions of tactile diagrams. In doing so, the scanner will be preserving approximately 40,000 diagrams and countless hours of creation that help to increase braille literacy and education for blind, visually impaired, and deafblind students throughout Minnesota.

DESIGN GOAL

The goal of this project was to develop a fully functional tactile diagram scanner for Minnesota State Services for the Blind. The scanner must be capable of digitally storing tactile diagrams without causing any damage to the original.

DESIGN CONTRAINTS

- Device shall scan diagrams up to 11.5 x 11 inches in size
- Scanned results shall be readable by State Services for the Blind personnel who are proficient in reading Braille
- Device shall not damage original tactile diagrams
- Device shall not harm user under normal operation
- Device shall be durable enough to perform at least 40,000 scans

LOCAL CHANGEMAKING

JAMEED DEHYDRATOR

From left to right: Casey J. Bennett, Erik I. Davis, Patrick R. Jackson, and Andrew H. Morgenstern

Nqaireh Women's Cooperative

TEAM F

INDUSTRY REPRESENTATIVE
Samia Jbour

FACULTY ADVISOR
Dr. Camille George

PROJECT SUMMARY

Jameed is a traditional Bedouin food that is used throughout Jordan in many of its most popular dishes, including the national dish: mansaf. The Nqaireh Women's Cooperative rely on jameed as a major source of income to serve disempowered women. In conjunction with the School for International Training, engineering students from the University of St. Thomas were requested to develop a device to effectively and efficiency dehydrate jameed. It is expected that the device will both improve the production rate of jameed as well as enable year-around production to be possible. This project continues the work of the 2018 Jordan senior design team.

DESIGN GOAL

To design a dehydration device that is capable of simulating and improving the traditional drying conditions of jameed for increased production rates and yielding product year-round.

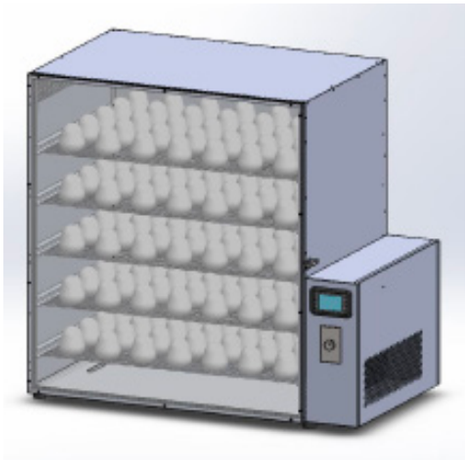

DESIGN CONSTRAINTS

- Must dehydrate jameed faster than traditional method.
- Must be operable throughout the calendar year.
- Jameed quality produced in device must be comparable to traditionally methods.
- Chamber temperature must be adjustable by the operator.
- Must be able to fit through a standard doorway.
- Must interface with Jordanian power grid (240V) and outlets
- Must be operable by humans without safety equipment.
- External temperature must not be a burn or fire hazard.
- Must be design for disassembly for shipping to Jordan
- Must be feasible to manufacture in Jordan.

TRANSFORMING ORGANIC MATERIAL IN THE HIGHLANDS OF SOUTHERN PERU

From left to right: Hunter E. Hill, Timothy J. Clifford, Michael F. Miller, and Rachel M. Lee.

THE ANDEAN ALLIANCE FOR SUSTAINABLE DEVELOPMENT

TEAM G

INDUSTRY REPRESENTATIVES
Aaron Ebner
Kat Gordon

FACULTY ADVISOR
Dr. Brittany Nelson-Cheeseman

PROJECT SUMMARY

Due to significant reduction in the number of livestock being raised within the Sacred Valley of Peru, a shortage of organic fertilizer for produce farmers has emerged. Recently, chipped maize and quinoa stalks have been introduced as a substitute, as opposed to purchasing costly fertilizer. Current methods to cut the stalk are either too time consuming or expensive. To allow organic farmers to benefit from this resource, we will construct a machine that is more accessible, safe, and lightweight than current chipping methods within the Sacred Valley.

DESIGN GOAL

To design, test, and build a machine that provides Peruvian farmers the option to re-use their corn and quinoa stalks for fertilization, as well as compost and animal feed. This machine will be implemented on a demonstration farm owned by AASD, to demonstrate to the community a more economic and sustainable farming method available in the Sacred Valley of Peru.

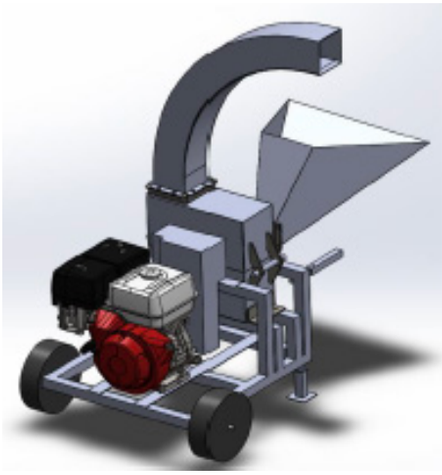

DESIGN CONSTRAINTS

- Selected design shall utilize materials and manufacturing processes accessible in the Sacred Valley of Peru.
- Device shall be powered by a Honda Gx390 motor currently owned by highland farming community members.
- Device shall chop organic material into 1 +/- 0.25" chips.
- Machine weight shall not exceed the carrying capacity of two men (~150 lbs).
- Final machine dimensions shall not exceed 6 ft by 4 ft for ease of transportation via flatbed truck
- Chipper output chute shall deliver chips to a height between 50 inches and 70 inches off the ground into the back of a flatbed truck
- Machine shall be coated in an oil-based finish to protect the machine from debris, temperature fluctuation, and precipitation.

GLOBAL CHANGEMAKING

SENIOR DESIGN CLINIC GUIDEBOOK 2020

SENIOR DESIGN CLINIC GUIDEBOOK 2020

THANK YOU
TO OUR SPONSORS

3M Science. Applied to Life.™

Andersen Windows • Doors

Medtronic

Mayo Clinic

Partners in Food Solutions
Connecting Expertise with Opportunity

Trane

Emerson

Minnesota Children's Museum

Horizon roofing

Abbott

3M Science. Applied to Life.™

PUC
Pillsbury United Communities

Pelvital
Restoring Pelvic Health

Collins Aerospace

Wilson Tool

Graco

HRST

SIT School for International Training

The Andean Alliance for Sustainable Development

Supply Chain Services

Behrens
Quality
Est. Metalware 1911
Minnesota

Minnesota State Services for the Blind in partnership with the Siemer Foundation

3M Science. Applied to Life.™
Post-it

Renewal by Andersen
Window Replacement
an Andersen Company

Sustainable Communities Partnership
Office of Sustainability Initiatives
University of St.Thomas

School of Engineering
University of St.Thomas